SINGLE-PHASE HYBRID INVERTER

USER MANUAL

SYNK-7K-SG05LP1-SM2
SYNK-7.6K-SG05LP1-SM2
SYNK-8K-SG05LP1-SM2

www.sunsynk.com
sales@sunsynk.com
customerservices@sunsynk.com

v.6 (03/09/25)

PLEASE RETAIN FOR FUTURE REFERENCE

Table of Contents

SAFETY 3
General Safety 3
Symbols/Safety Signs 3
Safety Instructions 5
Product Disposal 5

PRODUCT INTRODUCTION 6
Product Overview 6
Product Size 7
Product Features 8
Basic System Architecture 9
Product Handling Requirements 9

TECHNICAL SPECIFICATIONS 10

INSTALLATION 12
Parts List 12
Selecting the Mounting Area 13
Installations Tools 14
Mounting the Inverter 15
Battery Connection 16
Function Port Definition 17
Lead-Acid Battery Temperature Sensor 19
Grid Connection and Backup Load Connection 20
PV Connection 22
PV Module Selection 22
PV Module Wiring 22
Installing the CT Coil 24
Meter Connection 25
CHINT Meter 25
Eastron Meter 26
Earth Connection (MANDATORY) 27
Wiring System for Inverter 28
Typical Application of Diesel Generator 29
Single-Phase Parallel Connection 30
Single-Phase Parallel Connection in a Three-Phase Grid System 31

OPERATION 32
Switching ON/OFF 32
Display 32
LED Indicators 32
Function Buttons 32
LCD Operation Flow Chart 33
Home Page 34
Status Page 34
System Flow Page 35
Setup Page 36
Basic Setup 37
Set Time (Clock) 37
Set Company Name / Beeper / Auto dim 37
Factory Reset and Lock Code 38
Inverter Remote Control 39
Battery Setup Page 39
Generator & Battery Page 40
Battery Discharge Page 42
Setting Up a Lithium Battery 44
Charge & Discharge Times Program 51
Grid Supply Page 54
Paralleling Inverters Advanced Settings 58
Connecting the DRM's 61
Advanced Function Setup 62
Solar Power Generated 62
Grid Power 63
Advanced Settings for Wind Turbines 63
Advanced Settings for Auxiliary Load 64

OPERATION MODES 66
Mode I: Basic 66
Mode II: Generator 66
Mode III: With Aux-Load 67
Mode IV: AC Couple 67
Mode V: Grid-Tied 69

FAULT CODES 69

COMMISSIONING 73
Start-Up / Shutdown Procedure 73
Inverter Commissioning Info 73
GDFI Fault 74

MAINTENANCE 74

APPENDIX A 75

APPENDIX B 76

APPENDIX C 76

APPENDIX D 76

APPENDIX E 76

SUN SYNK®

SAFETY

General Safety

- This device must be used only as specified in this manual and in compliance with local, regional, and national laws and regulations. Ensure that the installation, operation, maintenance, and repair of this device are performed by individuals who have read and fully understood this manual. Always include this manual when passing the device to a third party.
- DO NOT allow minors, untrained personnel, or individuals with physical or mental impairments that may affect their ability to follow instructions to install, maintain, or repair this device.
- Any untrained person in proximity to the device during operation MUST be informed of the potential dangers and provided with proper instructions to prevent injury.

Symbols/Safety Signs

	This symbol indicates information that if ignored, could result in personal injury, physical damage or even death due to incorrect handling.		CE mark is attached to the solar inverter to verify that the unit follows the provisions of the European Low Voltage and EMC Directives.
	Risk of danger.		Warning: hot surface.
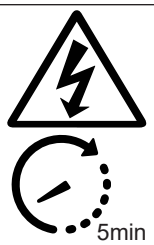	Risk of electric shock. DO NOT touch the terminal or remove the shell within 5 minutes after disconnecting all power.		The UKCA marking is used for products placed on the market in Great Britain (England, Scotland and Wales). The UKCA marking applies to most products for which the CE marking could be used.
	This product's batteries contain an explosive, self-reactive material that could blow up when heated.		Do not disassemble or alter the battery in any way. Do not strike or puncture the battery.
	The Battery is heavy and can cause injury if not handled safely.		ONLY qualified personnel should install or perform maintenance work on the units.
	Be careful when touching the inverter! It is an electrical product with risk of electric shock and heating.		Warranty Void if Seal is Broken.
	Do not place near open fire or incinerate. Do not use near heaters or hot temperature sources.		Keep the product out of reach of children!
	Do not stand on.		Avoid unsuitable shoes for installing and operating the inverter.
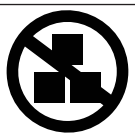	Do not step or put any objects onto the battery.		Do not drop, deform, or impact the battery.

1	Single Phase.	3	Three Phase.
	Protective Conductor Terminal or Earth Ground Terminal.		Rechargeable.
	Do not submerge the battery in water or expose it to moisture or liquid.		Keep out of reach of children, animals, and insects.
	Do not expose the product to sunlight.		Inverter DC to AC.
	Li-ion Battery.	KG	Net Weight in Kilograms.
	BATTERY INPUT Battery Discharge Voltage, Battery Discharge Current, Input Voltage Type, Battery Discharge Power.		**PV INPUT** PV Input Voltage, Number of MPPT's, MPPT Input Current & Max PV ISC.
	Direct Current.		Indicates that this product is recyclable.
	AC OUTPUT Output Voltage, Input Voltage Type, Ac Output Rated Current, Max AC Current, Output Frequency, Max AC ISC, Power Factor & AC Output Rated Power.		**CONTINUOUS OUTPUT CURRENT** Maximum Continuous Output Current, Output Frequency and Voltage, & AUX (programmable AC output on battery SOC).
	Charging.		Discharging.
25°C	Follow the indicated temperatures.	°C °C	**TEMPERATURE** Ambient, Min & Max.
	MANUAL DOWNLOAD Download the latest version of the instruction manual by scanning the QR code.		**WARRANTY REGISTRATION** Scan the QR code to access our website and sign up for the manufacturer's warranty.
	Do not dispose the device, accessories, and packaging with regular waste. Follow local ordinances or contact the manufacturer for disposal guidance.		Refer to the operating instructions. Contact the supplier within 24 hours if there is anything wrong. In case of leakage contact with eyes or skin, immediately clean with water and seek help from a doctor.

Safety Instructions

WARNING

HIGH LIFE RISK DUE TO FIRE OR ELECTROCUTION.

Sunsynk Single-Phase Hybrid Inverter can only be installed by a qualified licensed electrical contractor. This is not a DIY product.

- This section contains essential safety and operational guidelines. Please read carefully and retain this manual for future use.
- Prior to operating the inverter, review the safety warnings for the battery and consult the relevant sections of this manual.
- Do not disassemble the inverter. For repairs or maintenance, contact a qualified service technician. Incorrect reassembly can result in electric shock or fire.
- **Electric Shock Risk:** Always disconnect all power sources before performing any maintenance or cleaning. Simply turning off the inverter does not eliminate the risk.
- **Battery Safety:** Never attempt to charge a frozen battery.
- For optimal performance, select cables that meet the required specifications. Correct operation of the inverter depends on using the appropriate cable sizes.
- Exercise caution when using metal tools around batteries. Accidental drops could cause sparks or short circuits, leading to electrical fires or even explosions.
- Follow the correct procedures when disconnecting AC or DC terminals.
- See the “Installation” section for more information.
- **Grounding:** Ensure the inverter is connected to a permanent grounding system in compliance with local electrical regulations.
- Never allow a short circuit between the AC output and DC input. Do not connect to the main power grid if there is a DC short circuit.

Product Disposal

DO NOT dispose this product with domestic waste!

Electrical devices should be disposed of in accordance with regional directives on electronic and/or electronic-waste disposal. In case of further questions, please consult your supplier. In some cases, the supplier can take care of proper disposal.

PRODUCT INTRODUCTION

This multifunctional inverter combines the functions of an inverter, solar charger and battery charger to offer uninterruptible power support with a portable size. Its comprehensive LCD display offers user-configurable and easily accessible button operations such as battery charging, AC/solar charging, and acceptable input voltage based on different applications.

Product Overview

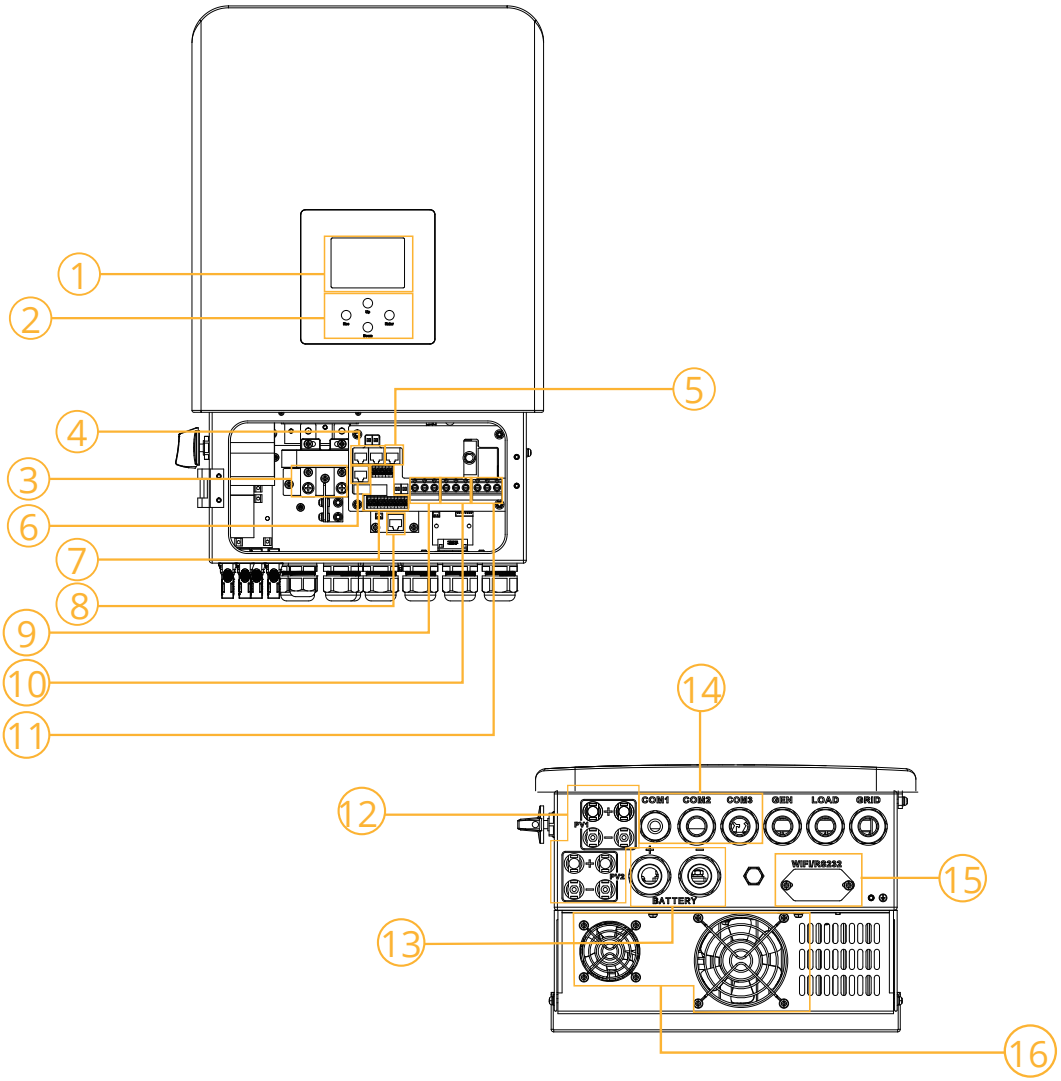

1. LCD Display
2. Function Buttons
3. Battery Input Connectors
4. Parallel Port
5. BMS 485/CAN Port
6. RS485/Meter Port
7. Function Port
8. DRMs Port
9. Generator Input
10. Load
11. Grid
12. PV Input with Two MPPT
13. Battery
14. Temperature Sensor
15. Wi-Fi Interface
16. Fan

Product Size

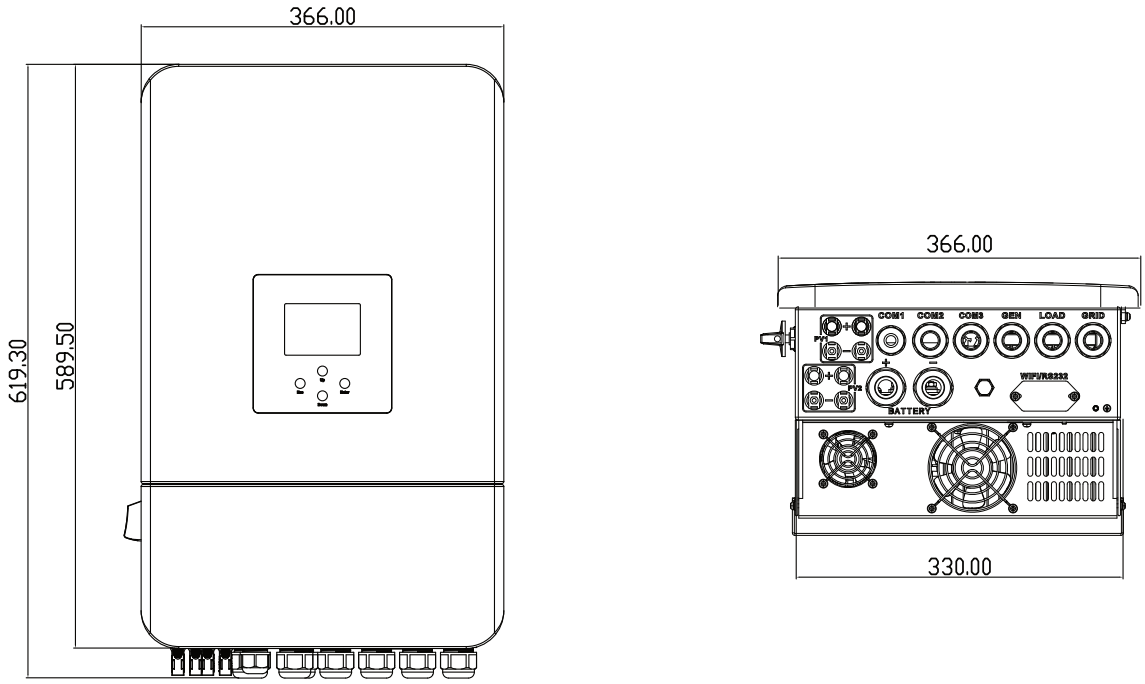

Inverter Size

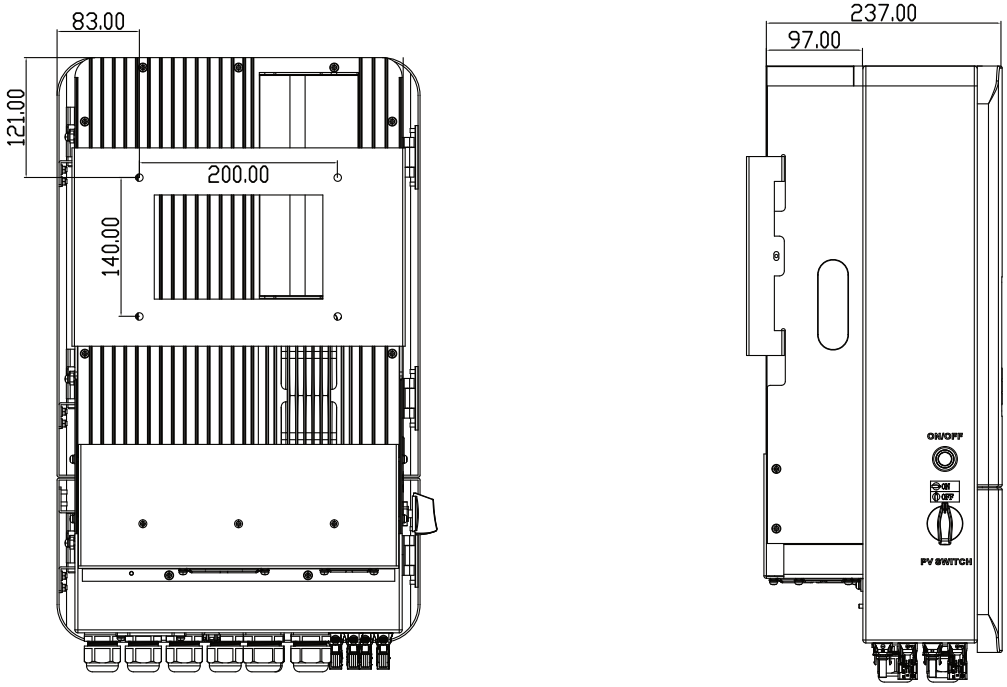

SUN SYNK®

Product Features

INTERACTIVE

- Easy and simple to understand display
- Supporting Wi-Fi or GSM monitoring
- Visual power flow screen
- Smart settable 3-stage MPPT charging for optimized battery performance
- Auxiliary load function
- Parallel / multi invert function grid-tied and off-grid

COMPATIBLE

- Compatible with main electrical grid voltages or power generators
- Compatible with wind turbines
- 220V single phase, pure sine-wave inverter
- Self-consumption and feed-in to the grid
- Auto restart while AC is recovering
- Auto earth bond feature (Via a relay)

CONFIGURABLE

- Fully programmable controller
- Programmable supply priority for battery or grid
- Programmable multiple operation modes: on-grid/off-grid & UPS
- Configurable battery charging - current/voltage based on applications by LCD setting
- Configurable AC / solar / generator charger priority by LCD setting

SECURE

- Overload/over-temperature/short-circuit protection
- Smart battery charger design for optimized battery protection
- Limiting function installed to prevent excess power overflow to grid

APPLICATIONS

- Marine (vessel power management)
- Power shedding (home/office/factory)
- UPS (fuel-saving systems)
- Remote locations with solar and wind generators
- Building sites
- Military locations
- Telecommunication

Basic System Architecture

The illustration below shows a typical configuration of this inverter. For a complete operational system, the following components are required:

- Generator or Utility Grid
- PV modules

Depending on your specific requirements, consult with your system integrator to explore other possible system architectures.

This inverter is designed to power a wide range of household appliances, including motor-driven devices like refrigerators and air conditioners.

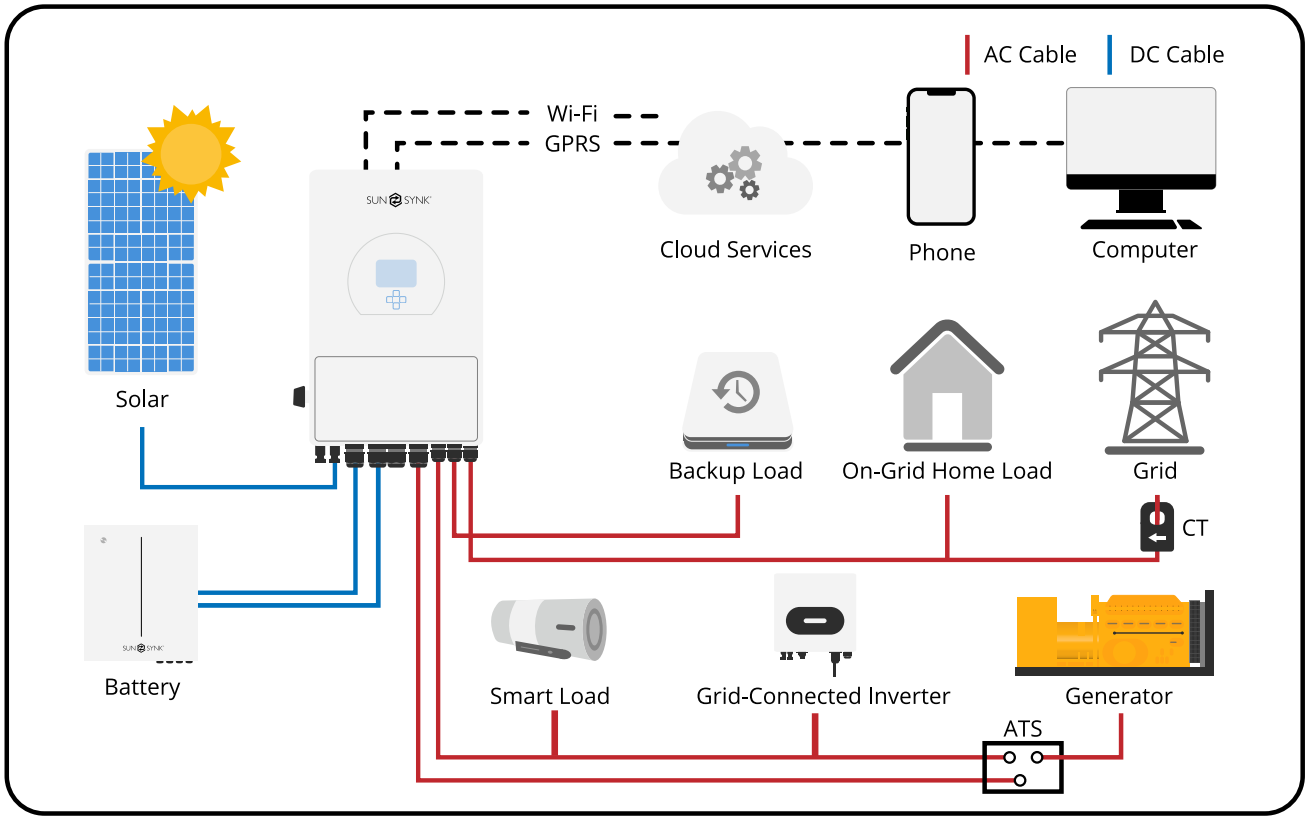

Product Handling Requirements

Lift the inverter out of the packing box and transport it to designated installation location.

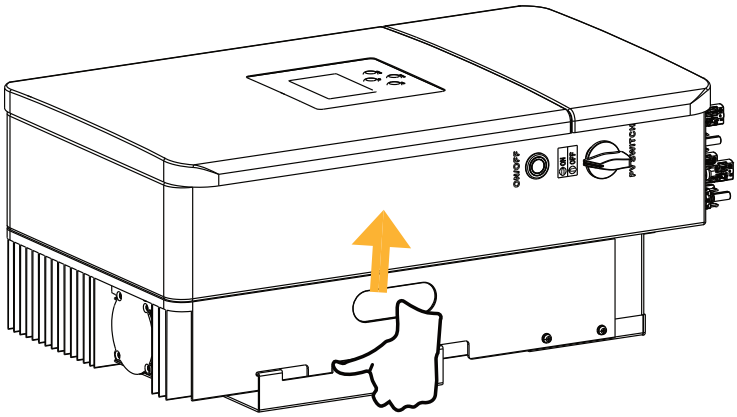

Transport

TECHNICAL SPECIFICATIONS

Model	SYNK-7K-SG05LP1-SM2	SYNK-7.6K-SG05LP1-SM2	SYNK-8K-SG05LP1-SM2
Battery Input Date			
Battery Type	Lead-acid or Li-Ion		
Battery Voltage Range	48Vd.c (40Vd.c ~ 60Vd.c)		
Max. Charging/Discharging Current	175Ad.c (max.)	190Ad.c (max.)	
Charging Strategy for Li-Ion Battery	Self-adaption to BMS		
Number of Battery Input	1		
PV String Input Data			
Max. PV access power	14000W	15200W	16000W
Max. PV Input Power	11200W	12160W	12800W
Max. PV Input Voltage	500V		
Start-up Voltage	125V		
PV Input Voltage Range	125-500V		
MPPT Voltage Range	150-425V		
Full Load MPPT Voltage Range	200-425V		
Rated PV Input Voltage	370V		
Max. Operating PV Input Current	32A+32A		
Max. Input Short-Circuit Current	48A+48A		
No. of MPP Trackers/No. of Strings MPP Tracker	2/2+2		
Max. Inverter Backfeed Current to The Array	0		
AC Input/Output Data			
Rated AC Input/Output Active Power	7000W	7600W	8000W
Max. AC Input/Output Apparent Power	7700VA	8360VA	8800VA
Peak Power (off-grid)	2 times of rated power, 10s		
Rated AC Input/Output Current	31.9/30.5Aa.c	34.6/33.1Aa.c	36.4/34.8Aa.c
Max. AC Input/Output Current	35/33.5Aa.c	38/36.4Aa.c	40/38.3Aa.c
Max. Continuous AC Passthrough (grid to load)	50A		
Max. Output Fault Current	70A	76A	80A
Max. Output Overcurrent Protec-tion	140A		
Rated Input/Output Voltage/Range(	220V/230V 0.85Un-1.1Un		
Grid Connection Form	L+N+PE		
Rated Input/Output Grid Frequen-cy/Range	50Hz/45Hz-55Hz 60Hz/55Hz-65Hz		
Power Factor Adjustment Range	0.8 leading to 0.8 lagging		
Total Current Harmonic Distortion THDi	<3% (of nominal power)		
DC Injection Current	<0.5% In		

Efficiency	
Max. Efficiency	97.60%
Euro Efficiency	96.50%
MPPT Efficiency	>99%
Protection	
Integrated	PV Input Lightning Protection, Anti-islanding Protection, PV String Input Reverse Polarity Protection, Insulation Resistor Detection, Residual Current Monitoring Unit, Output Over Current Protection, Output Shorted Protection.
Surge Protection	DC Type II / AC Type II
Over Voltage Category	DC Type II / AC Type III
Interface	
Display	LCD+LED
Communication Interface	RS232, RS485, CAN
Monitor Mode	GPRS/WIFI/Bluetooth/4G/LAN (optional)
General Data	
Operating Temperature Range	-40~60 ℃, >45 ℃ Derating
Permissible Ambient Humidity	0-100%
Permissible Altitude	2000m
Noise	<30 dB
Ingress Protection(IP) Rating	IP65
Inverter Topology	Non-Isolated
Over Voltage Category	OVC II(DC), OVC III(AC)
Cabinet size (WxHxD)	366×589.5×237mm (Excluding connectors and brackets)
Weight	26.8kg
Warranty	5 years (10 years when installed with a Sunsynk battery)
Type of Cooling	Smart cooling
Grid Regulation	NRS 097-2-1; Additional connections available upon request
Safety EMC/Standard	IEC/EN 61000-6-1/2/3/4, IEC/EN 62109-1, IEC/EN 62109-2

NOTE:

Safe Transport and Handling of Inverter:

When transporting the equipment, use its original packaging and keep it as a complete unit. Store the product in a dry environment, avoiding direct sunlight, and maintain a temperature range between -40°C and 60°C. Since the equipment can be quite heavy, always consider its total weight when moving, transporting, or installing it, ensuring that the installation site has adequate load-bearing capacity. Transporting and installing the inverter should be carried out solely by qualified personnel.

INSTALLATION

Parts List

Check the equipment before installation. Please make sure nothing is damaged in the package. You should have received the items in the following package:

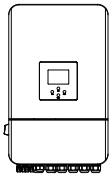

Hybrid Inverter
x1

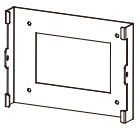

Wall Mounting Bracket
x1

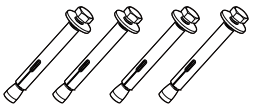

Stainless Steel
Anti-Collision Bolt M6*60
x4

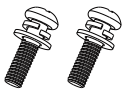

Stainless Steel Mounting
Screws M4*12 x4

Parallel Communication
Cable x1

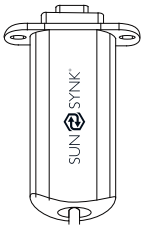

Datalogger (optional) x1

Battery Temperature
Sensor x1

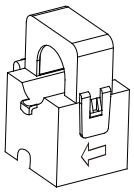

Sensor Clamp
x1

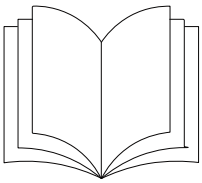

User Manual x1

1

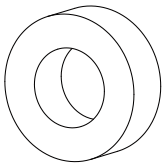

Battery Magnetic Ring
x1

2,9

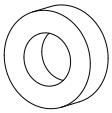

BMS Magnetic Ring
and Meter Communication
Cable x2

6,7,8

AC wires Magnetic Ring
x3

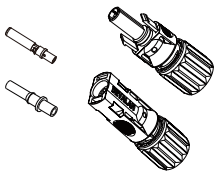

DC+/DC- Plug Connectors
Including Metal Terminal
xN

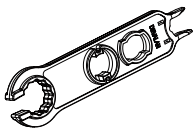

Solar Photovoltaic
Connector Special
Spanner x1

3,5

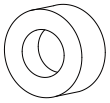

Magnetic Ring x2

4

Magnetic Ring for
CT's Output Wire x1

Selecting the Mounting Area

This Hybrid Inverter is designed for outdoor use (IP65), DO NOT install the inverter in the following areas:

- Areas with high salt content, such as the marine environment. It will deteriorate the metal parts and possibly lead to water/dampness penetrating the unit.
- Areas filled with mineral oil or containing splashed oil or steam, such as those found in kitchens. It will deteriorate plastic parts of the unit, causing those parts to fail or allowing water/damp to penetrate the unit.
- Areas that generate substances that adversely affect the equipment, such as sulphuric gas, chlorine gas, acid, or alkali. These can cause the copper pipes and brazed joints to corrode and fail to conduct electricity reliably.
- Areas that can cause combustible gas to leak, which contains suspended carbon-fibre or flammable dust, or volatile inflammable such as paint thinner or gasoline.
- Areas where there may be gas leaks and where gas may settle around the unit as this is a fire risk.
- Areas where animals may urinate on the unit or ammonia may be generated.
- High altitude areas (over 2000 metres above sea level).
- Environments where precipitation or humidity is above 95%
- Areas where the air circulation is too low.

Please **AVOID** direct sunlight, rain exposure, snow laying up during installation and operation. Before connecting all wires, please take off the metal cover by removing screws as shown below:

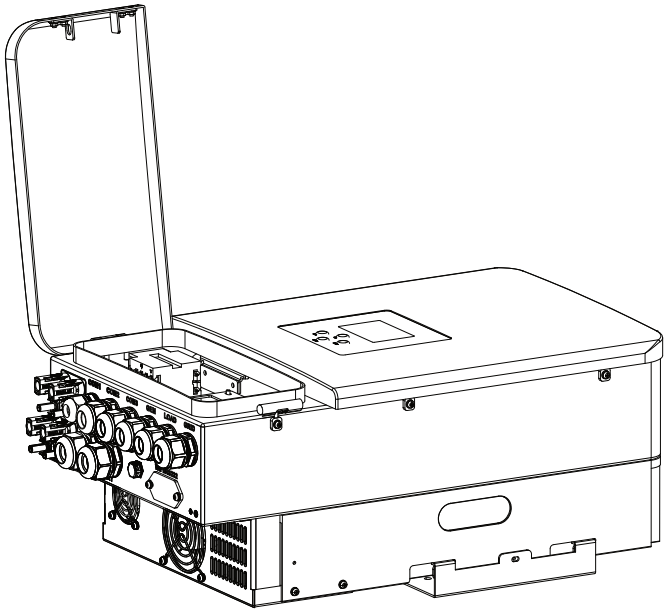

Considering the following points before selecting where to install:

- Please select a vertical wall with load-bearing capacity for installation, suitable for installation on concrete or other non-flammable surfaces, installation is shown below.
- Install this inverter at eye level in order to allow the LCD display to be read at all times.
- The ambient temperature is recommended to be between -40~60ºC to ensure optimal operation.
- Be sure to keep other objects and surfaces as shown in the diagram to guarantee sufficient heat dissipation and enough space to remove wires.

- Install the indoor unit on the wall where the floor height is higher than 1600mm.
- For proper heat dissipation, allow a clearance of approximately 500mm to the side, 500mm above and below the unit, and 1000mm to the front of the unit.

WARNING

For proper air circulation to dissipate heat, allow a clearance of approx. 50cm to the side and approx. 50cm above and below the unit. And 100cm to the front.

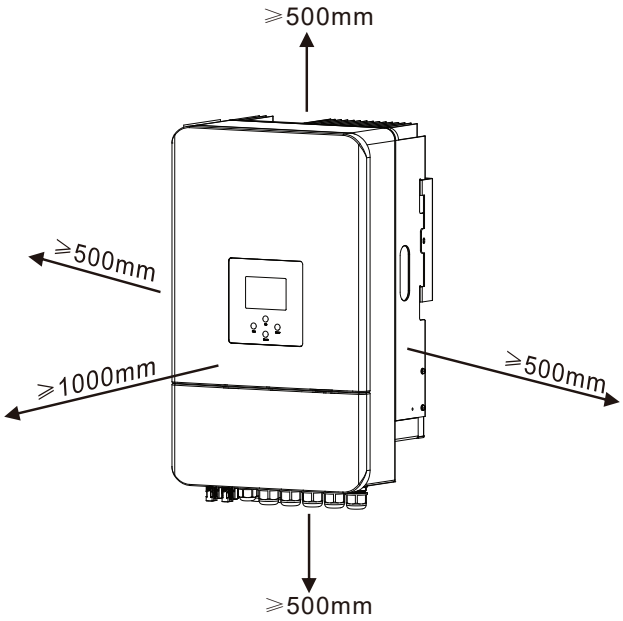

Installations Tools

Installation tools can refer to the following recommended ones. Also, use other auxiliary tools on site.

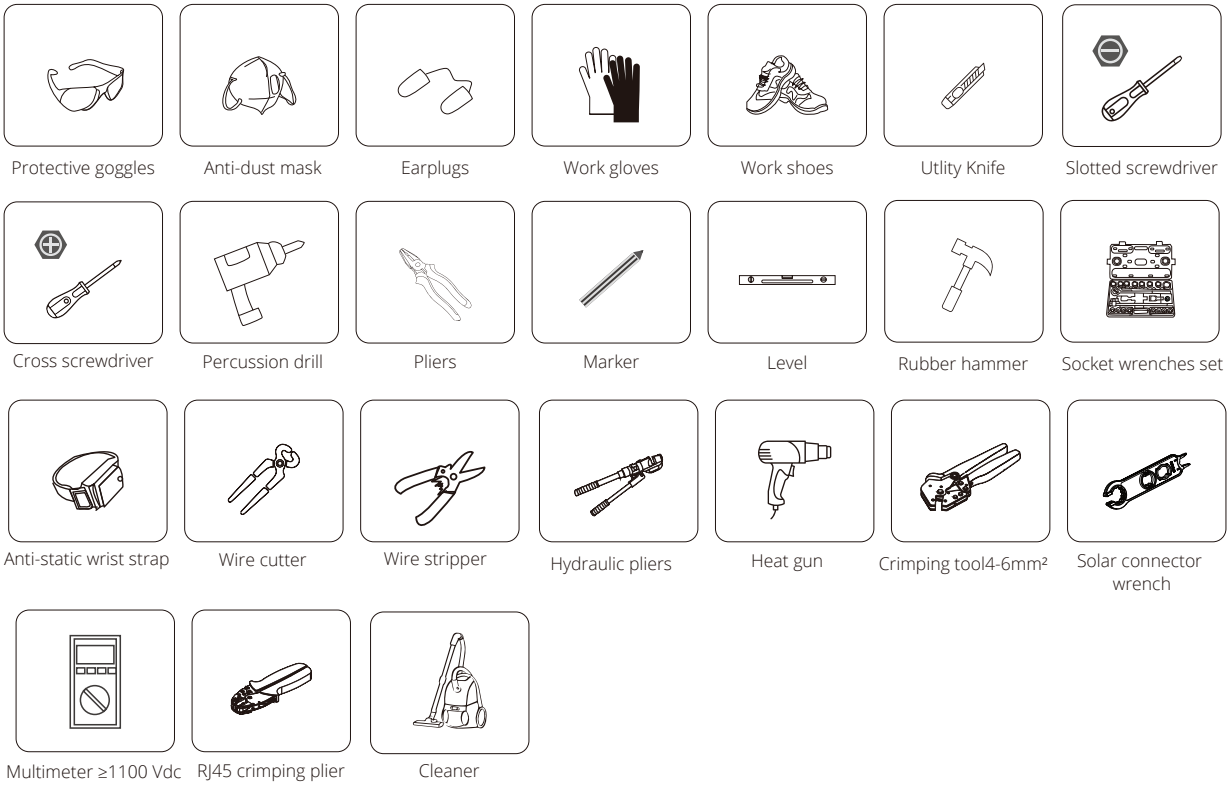

Mounting the Inverter

Choose the recommended drill head (as shown below pic) to drill 4 holes in the wall, 62-70mm deep.

1. Use a proper hammer to fit the expansion bolt into the holes.
2. Carry and hold the inverter, ensure the hanger aims at the expansion bolt, and fix the inverter on the wall.
3. Fasten the screw head of the expansion bolt to finish the mounting.

WARNING

Risk of injury (Heavy Object).

Remember that this inverter is heavy so users must be careful in handling the unit during installation especially when mounting or removing from a wall.

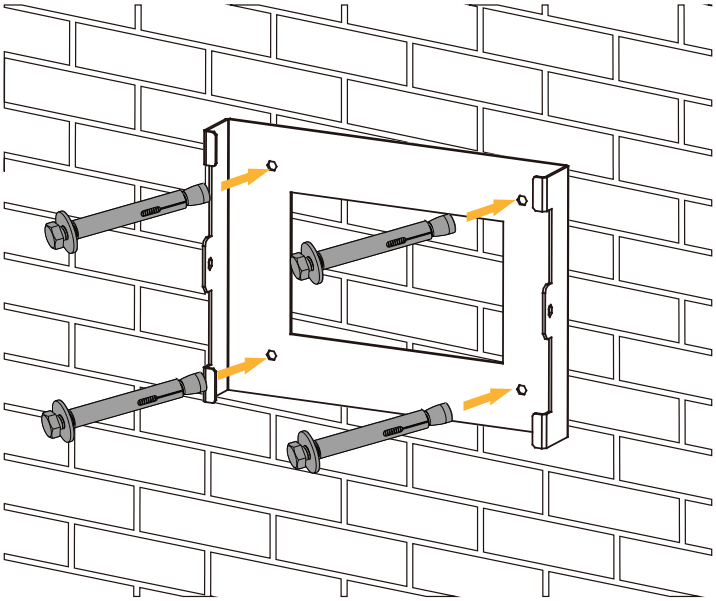

Inverter Hanging Plate Installation

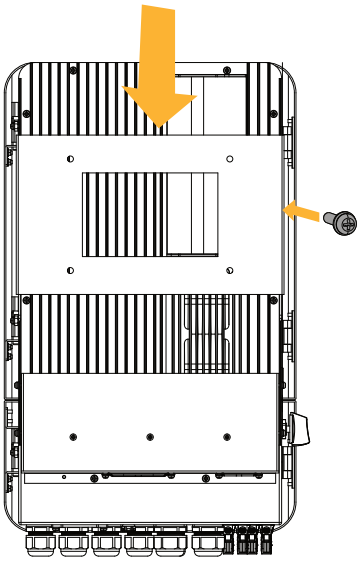

Battery Connection

For safe operation and compliance, a separate DC over-current protector or disconnect device is required between the battery and the inverter. Switching devices may not be required in some applications, but over-current protectors are still required. Refer to the typical amperage in the table below for the required fuse or circuit breaker size.

Model	Wire Size	Cable (mm²)	Torque Value (Max.)
7kW / 7.6kW / 8kW	3/0AWG	70	5.2N.m

WARNING

All wiring/connecting must be performed by qualified personnel. Before making the final DC connection or closing the DC Breaker/disconnection device, ensure the inverter unit is wired correctly. A reverse-polarity connection on the battery will damage the inverter.

Please follow the below steps to implement battery connection:

- Please choose a suitable battery cable with the correct connector which can well fit into the battery terminals.
- Use a suitable screwdriver to unscrew the bolts and fit the battery connectors in, then fasten the bolt with the screwdriver, ensuring the bolts are tightened with a torque of 5.2 N.m in a clockwise direction.
- Make sure the polarity at both the battery and inverter is correctly connected.
- In case of children touching or insects entering the inverter. Please make sure the inverter connector is fastened to a waterproof position by twisting it clockwise.

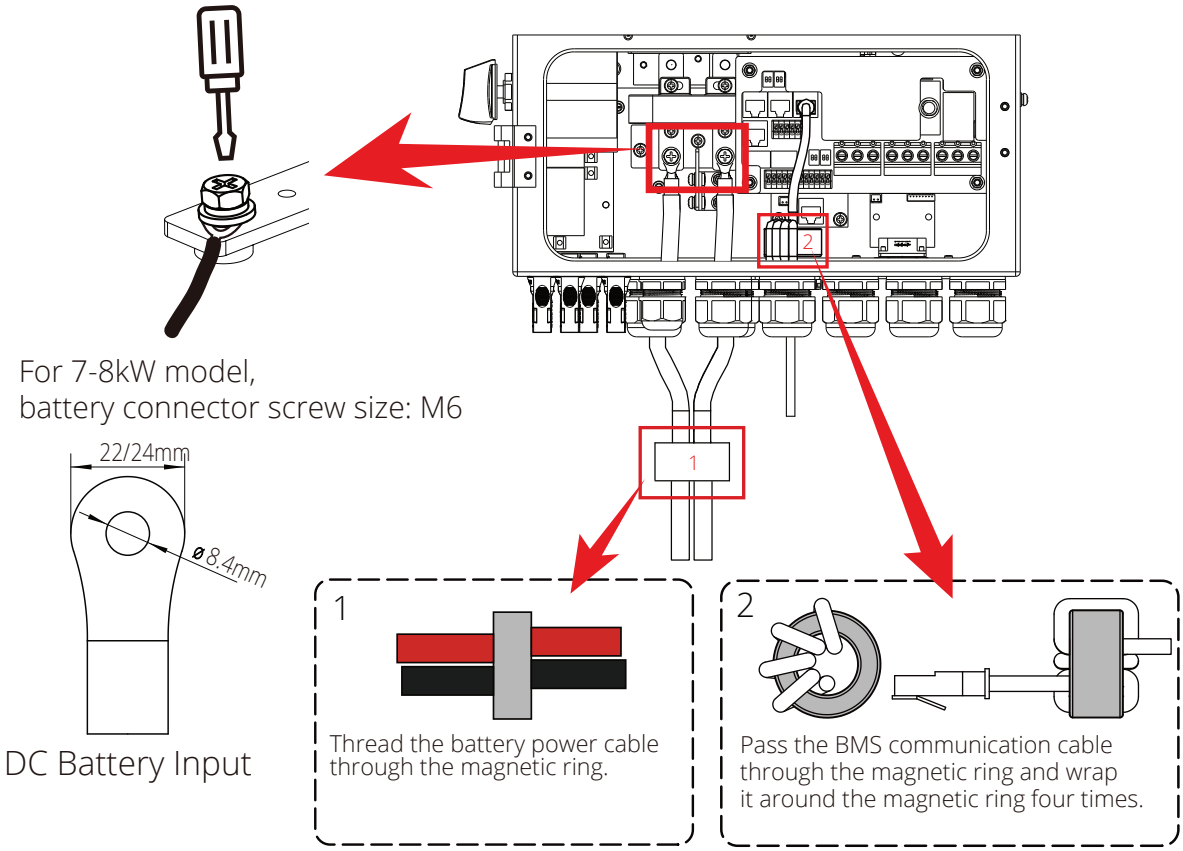

WARNING

Reverse Polarity.

Before making the final DC connection or closing DC breaker/disconnect, be sure positive (+) must be connected to the positive (+) and negative (-) must be connected to the negative (-). A reverse polarity connection on the battery will damage the inverter.

Function Port Definition

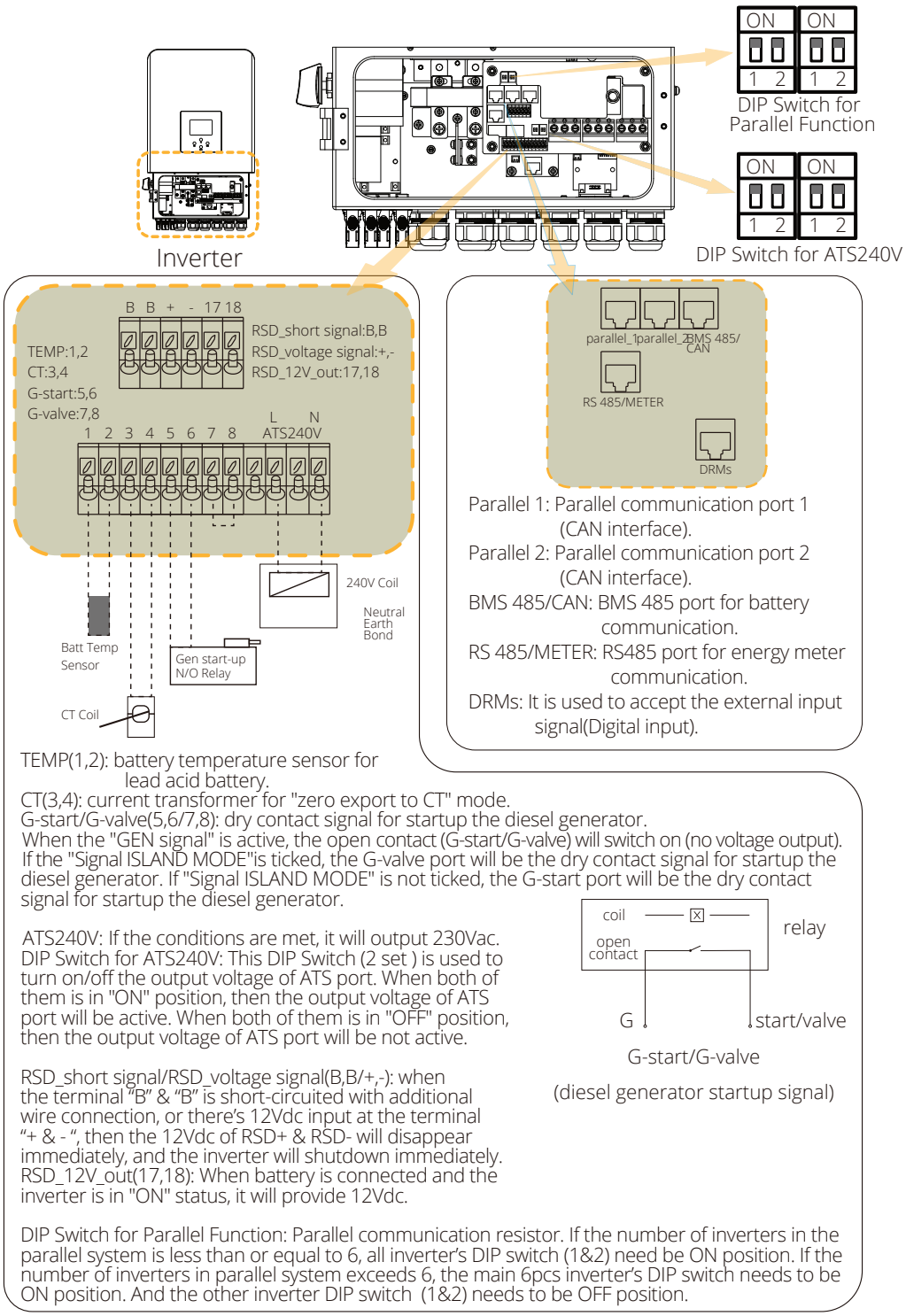

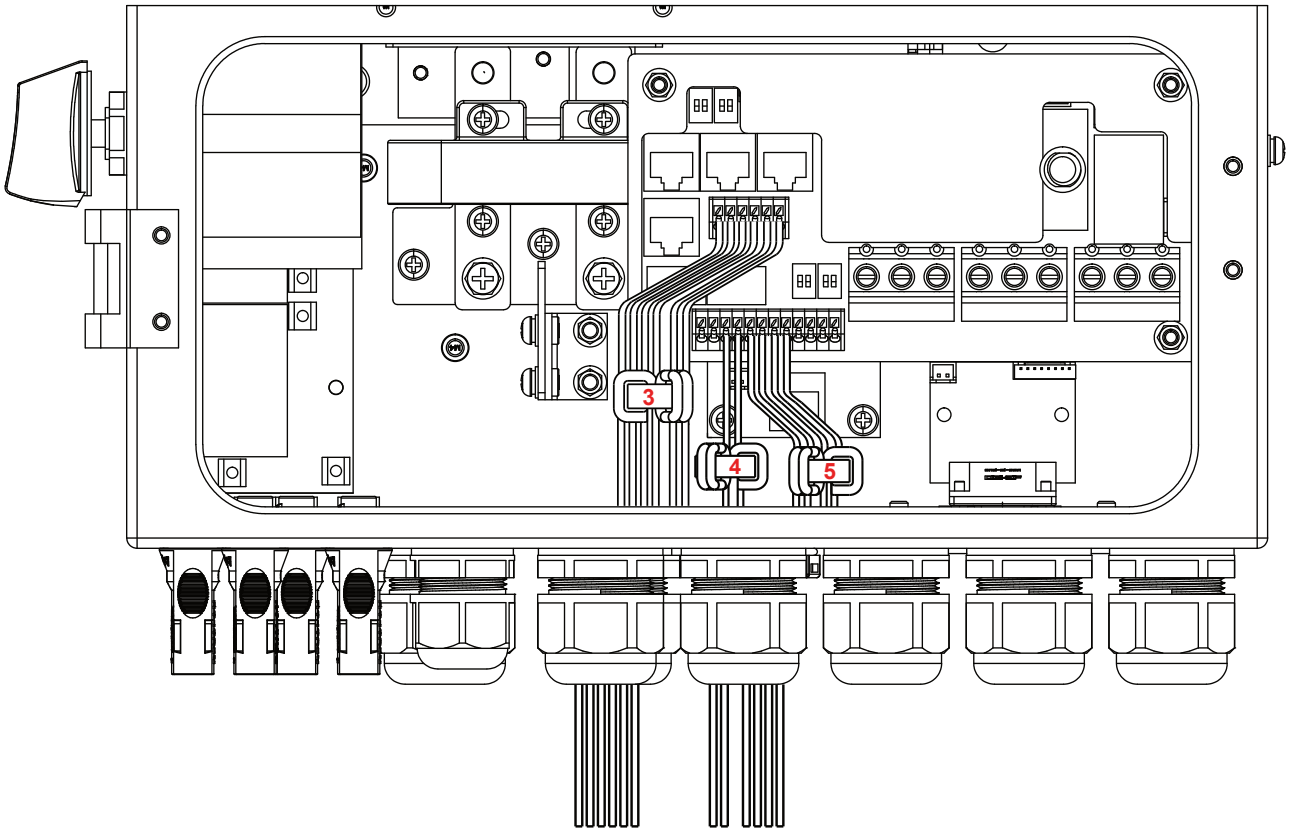

No.	Function Port	Installations Instructions
3	RSD_short signal (B,B) RSD_voltage signal (+,-) RSD_12V_out (17,18)	Wrap the wires three laps around the magnetic ring, then thread the end of wires through the magnetic ring.
4	CT(3,4)	Wrap the wires three laps around the magnetic ring, then thread the end of wires through the magnetic ring.
5	G-start (5,6) G-valve (7,8)	Wrap the wires three laps around the magnetic ring, then thread the end of wires through the magnetic ring.

Lead-Acid Battery Temperature Sensor

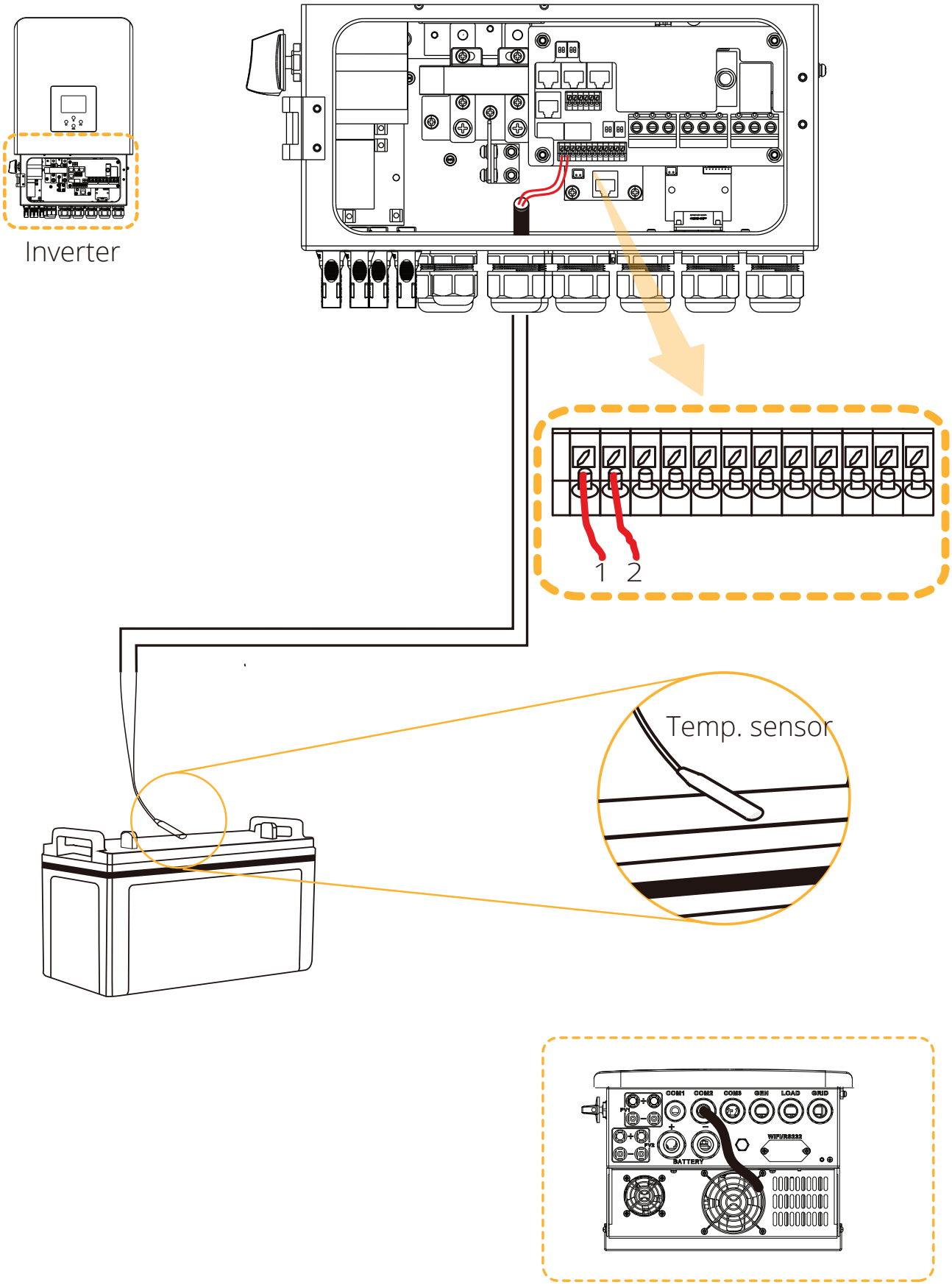

SUN SYNK®

Grid Connection and Backup Load Connection

Before connecting to the grid, please install a separate AC breaker between the inverter and the grid. Also, it is recommended to install an AC breaker between the backup load and inverter. This will ensure that the inverter can be securely disconnected during maintenance and fully protected from overcurrent. For the 7/7.6/8kW model, the recommended AC breaker for backup load is 50A. For the 7/7.6/8kW model, the recommended AC breaker for grid is 50A.

There are three terminal blocks with "Grid" "Load" and "GEN" markings. Please do not misconnect the input and output connectors.

GEN/AUX	Generator connection.
GRID	This works like a conventional grid-tied inverter. It is both an input and output connection for non-essential load and supply.
LOAD	Connection of essential loads such as lighting, security systems, and internet.

WARNING

In final installation, breaker certified according to IEC 60947-1 and IEC 60947-2 shall be installed with the equipment.

All wiring must be performed by qualified personnel. System safety and efficient operation need to use appropriate cable for AC input connection. To reduce the risk of injury, please use the recommended cable below.

Grid connection and backup load connection (copper wires)

Model	Wire Size	Cable (mm²)	Torque Value (Max.)
7/7.6/8 kW	6AWG	10	1.2N.m

Grid connection and backup load connection (copper wires) (Bypass)

Model	Wire Size	Cable (mm²)	Torque Value (Max.)
7/7.6/8 kW	6AWG	10	1.2N.m

Please follow the steps below to complete the AC input/output connection:

1. Before connecting the Grid, Load, and Generator ports, ensure the AC breaker or disconnector is switched off.
2. Strip 10mm of insulation from the wire ends and loosen the terminal bolts. First, thread the wires through the magnetic ring, then insert the wires into the terminals according to the polarities indicated on the terminal block. Tighten the terminal screws and ensure the wires are securely and properly connected.

NOTE:

Be sure that AC power source is disconnected before attempting to wire it to the unit.

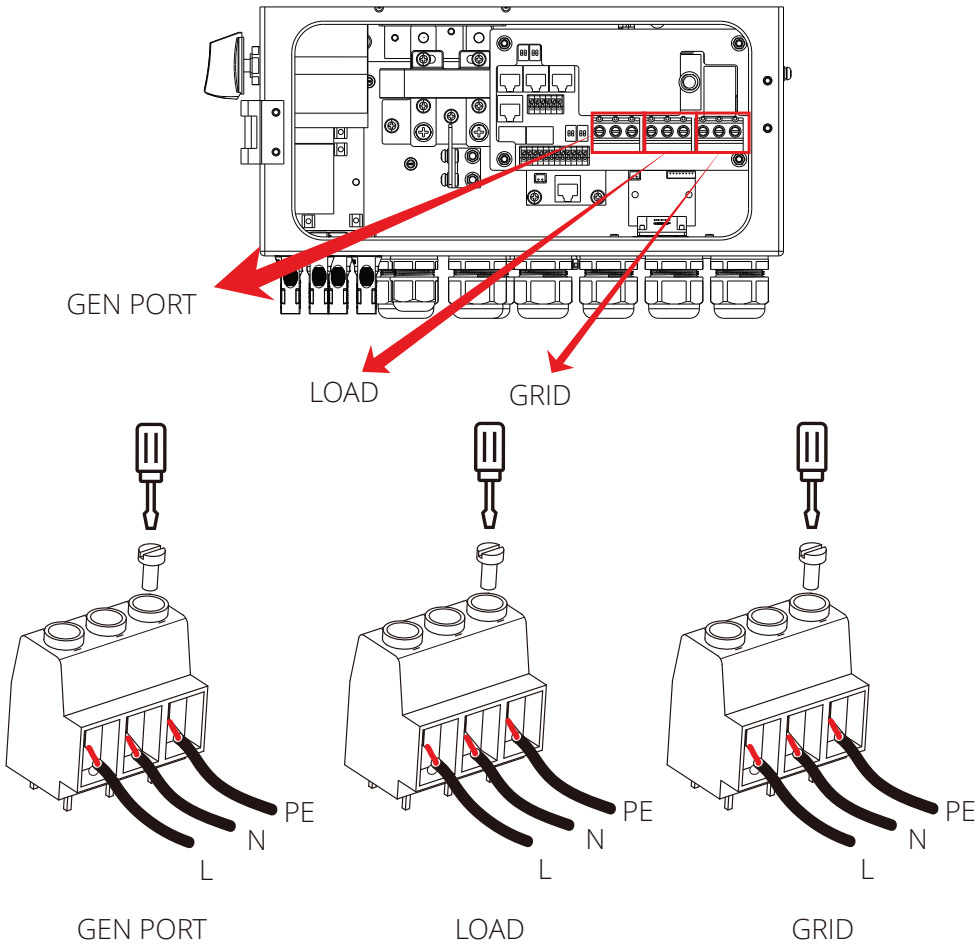

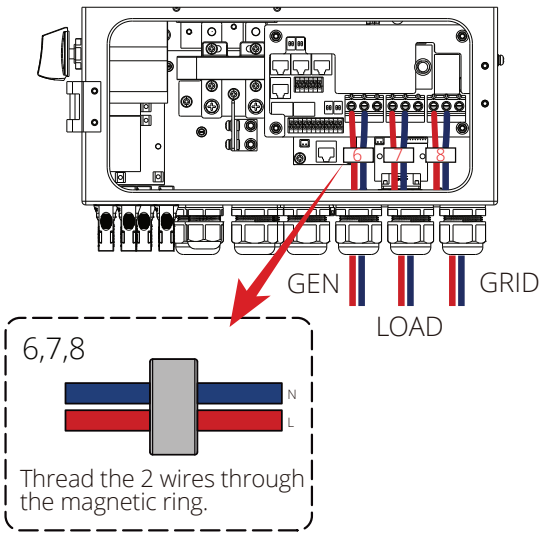

3. Then, insert AC output wires according to the polarities indicated on the terminal block and tighten the terminal. Make sure to connect corresponding N wires and PE wires to related terminals as well.
4. Ensure the wires are securely connected.
5. Appliances such as air conditioners are required at least 2-3 minutes to restart because it requires enough time to balance refrigerant gas inside the circuit. If a power shortage occurs and recovers in a short time, it will cause damage to your connected appliances. To prevent this kind of damage, please check with the air conditioner manufacturer if it is equipped with a time-delay function before installation. Otherwise, this inverter will trigger an overload fault and cut off output to protect your appliance, but sometimes it still causes internal damage to the air conditioner.

PV Connection

Before connecting to PV modules, please install a separate DC circuit breaker between the inverter and PV modules. It is very important for system safety and efficient operation to use appropriate cable for PV module connection. To reduce the risk of injury, please use the proper recommended cable size as below.

Model	Wire Size	Cable (mm^2)
7/7.6/8 kW	12AWG	2.5

WARNING

Do not connect any PV modules with possible current leakage to the inverter to avoid any malfunction. For example, grounded PV modules will cause current leakage to the inverter. When using PV modules, please ensure the PV+ & PV- of solar panel is not connected to the system ground bar.

It is requested to use a PV junction box with surge protection. Otherwise, it will cause damage to the inverter when lightning occurs on PV modules.

PV Module Selection

When selecting proper PV modules, please be sure to consider below parameters:

1. Open circuit voltage (Voc) does not exceed the max. PV array open circuit voltage of the inverter.
2. Open circuit voltage (Voc) should be higher than min. start voltage.
3. The PV modules connected to this inverter shall be Class A rating certified according to IEC 61730.

Model	7/7.6/8kW
PV Input Voltage	370V (125V~500V)
PV Array MPPT Voltage Range	125V-425V
No. of MPP Trackers	2
No. of Strings per MPP Tracker	2+2

PV Module Wiring

1. Switch the Grid Supply Main Switch (AC) OFF.
2. Switch the DC isolator OFF.
3. Assemble PV input connector to the inverter.

WARNING

Please do not connect the PV array's positive and negative poles to the ground. This can seriously damage the inverter.

Before connection, please make sure the polarity of the output voltage of PV array matches the “DC+” and “DC-” symbols.

Before connecting the inverter, please make sure the PV array open-circuit voltage is within the maximum limit of the inverter.

DC+ Male Connector DC- Female Connector

NOTE:

Please use approved DC cable for PV system.

The correct steps in assembling the DC connector are explained below:

1. Strip 7mm of the plastic coating off the DC wire and disassemble the connector cap nut.

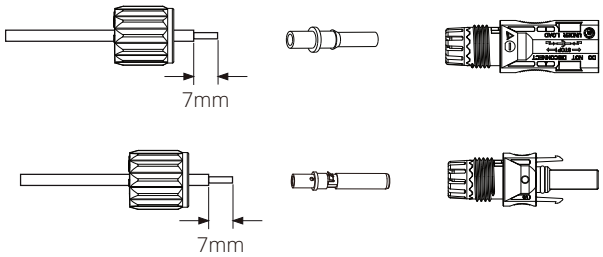

Disassemble the connector cap nut

2. Crimp metal terminals with crimping pliers.

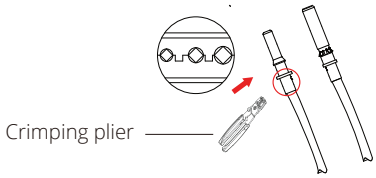

Crimp the contact pin to the wire

3. Insert the contact pin into the connector housing until it locks into place. Then screw the cap nut onto the connector housing. Torque to 2.5-3 N.m.

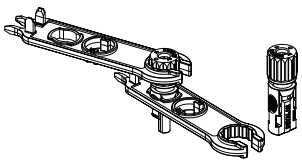

Connector with cap nut screwed on

4. Finally, insert the DC connector into the positive and negative input of the inverter.

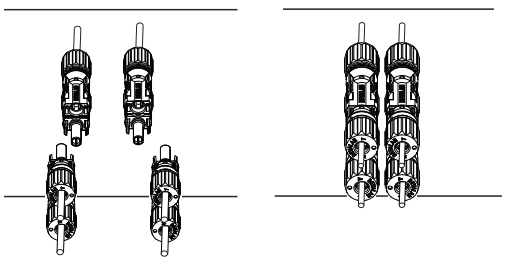

DC input connection

WARNING

When sunlight hits the solar panel, it generates voltage. High voltage in a series connection may pose a serious risk to life. Therefore, before connecting the DC input line, the solar panel should be covered with an opaque material, and the DC switch must be turned 'OFF'. Failure to do so may result in dangerous high voltage from the inverter, creating life-threatening conditions.

Installing the CT Coil

The CT coil is one of the most important parts of the Sunsynk Parity inverter. This device reduces the power of the inverter to prevent feeding power to the grid. This feature is also known as “Zero Export”.

1. Fit the coil (sensor) around the live cable on the main fuse feeding the building and run the cable back to the inverter. If using an external meter, you can extend the cable for more than 10 metres. Please consult the meter manual on distance.
2. Connect the other end of the CT coil to the inverter terminals marked as CT coil.

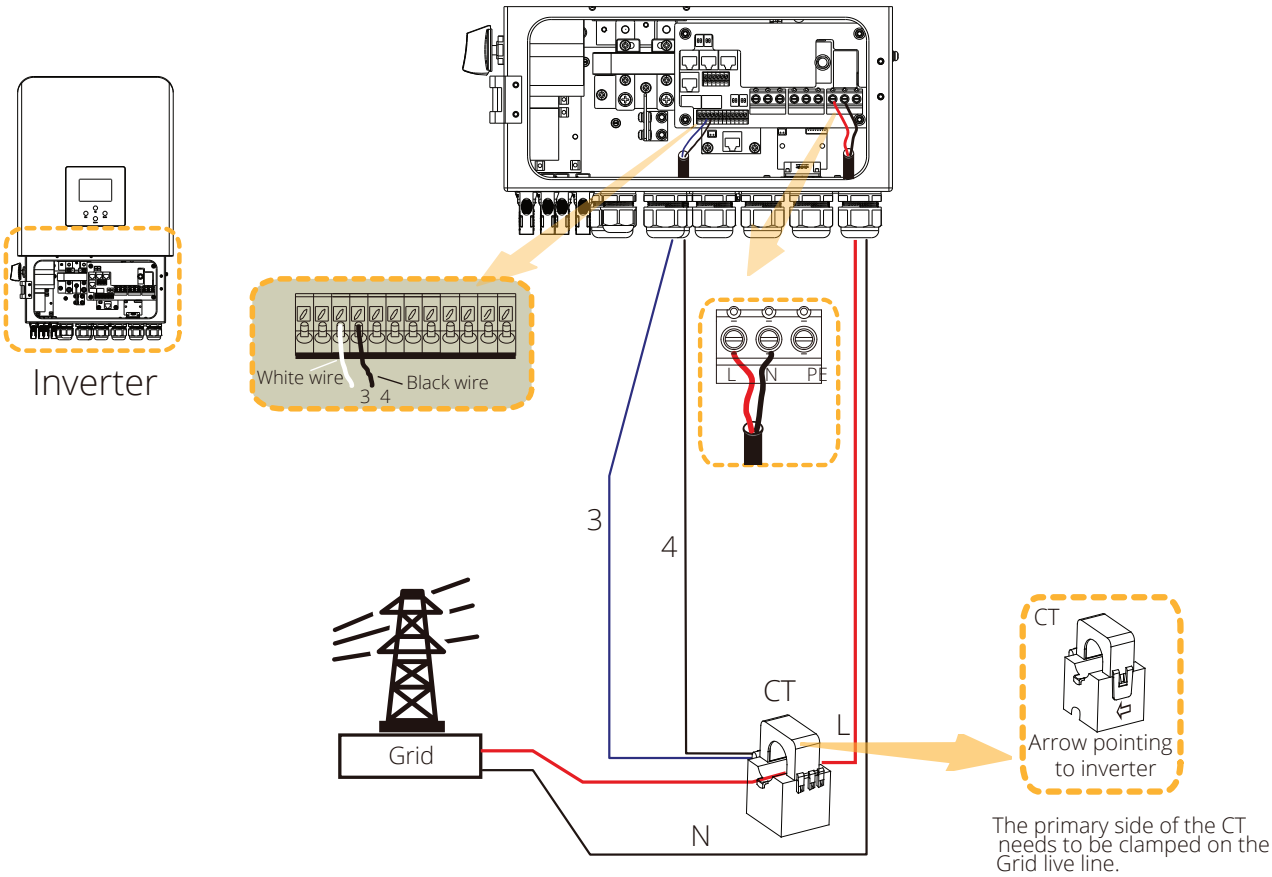

WARNING

When the reading of the load power on the LCD is not correct, please reverse the CT arrow.

0 Watts 0% (SOC) 0.00 Volts 0.00 Amps 0.0 C	0 Watts 0 Hz 0 Volts 0.0 Amps CT: 0 Watts LD: 0 Watts	0 Watts 0 Volts 0.0 Amps
Battery	**Grid Power**	**Solar Power 1**
0 Watts 50.0 Hz 0 Volts 0.00 Amps	0 Watts 0 Volts	0 Watts 0 Volts 0.0 Amps
Inverter Power	**Load Power**	**Solar Power 2**

If the CT coil is fitted in the wrong way then this variable will have negative instead of positive values when the power is flowing into the house/inverter. Also, the inverter export limiting function will not work properly.

Meter Connection

CHINT Meter

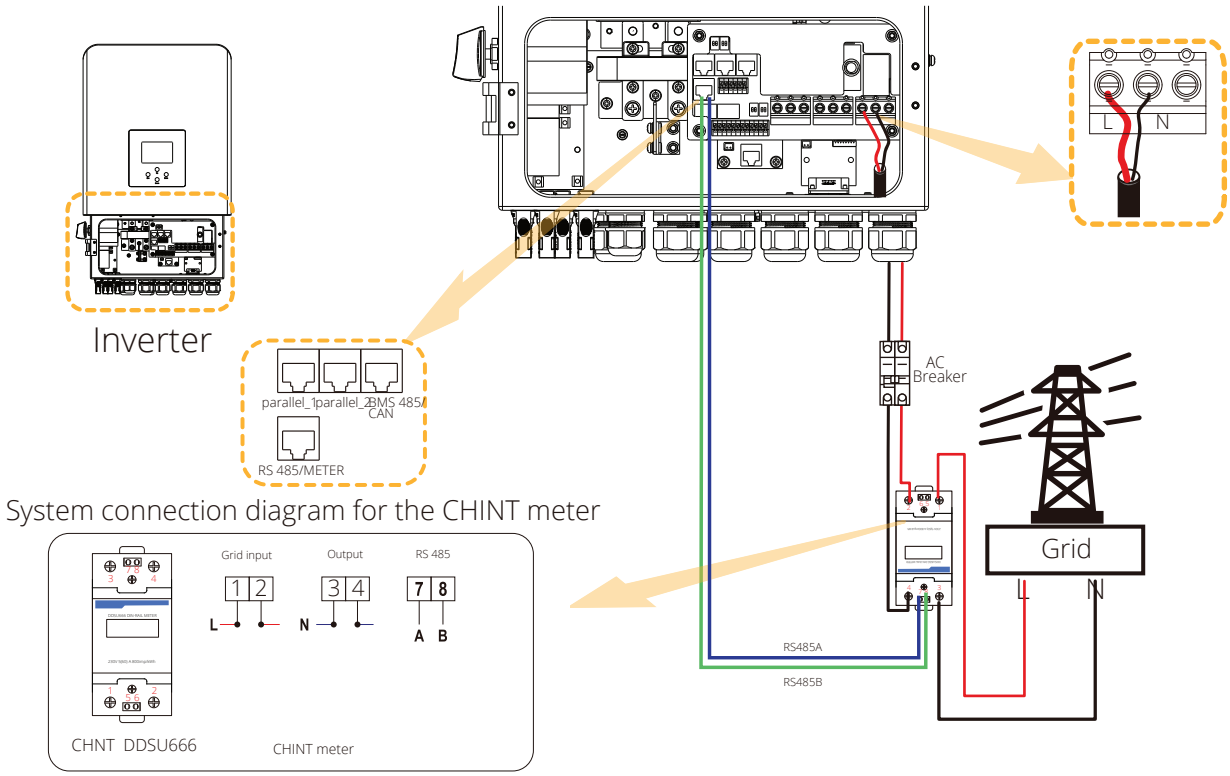

Eastron Meter

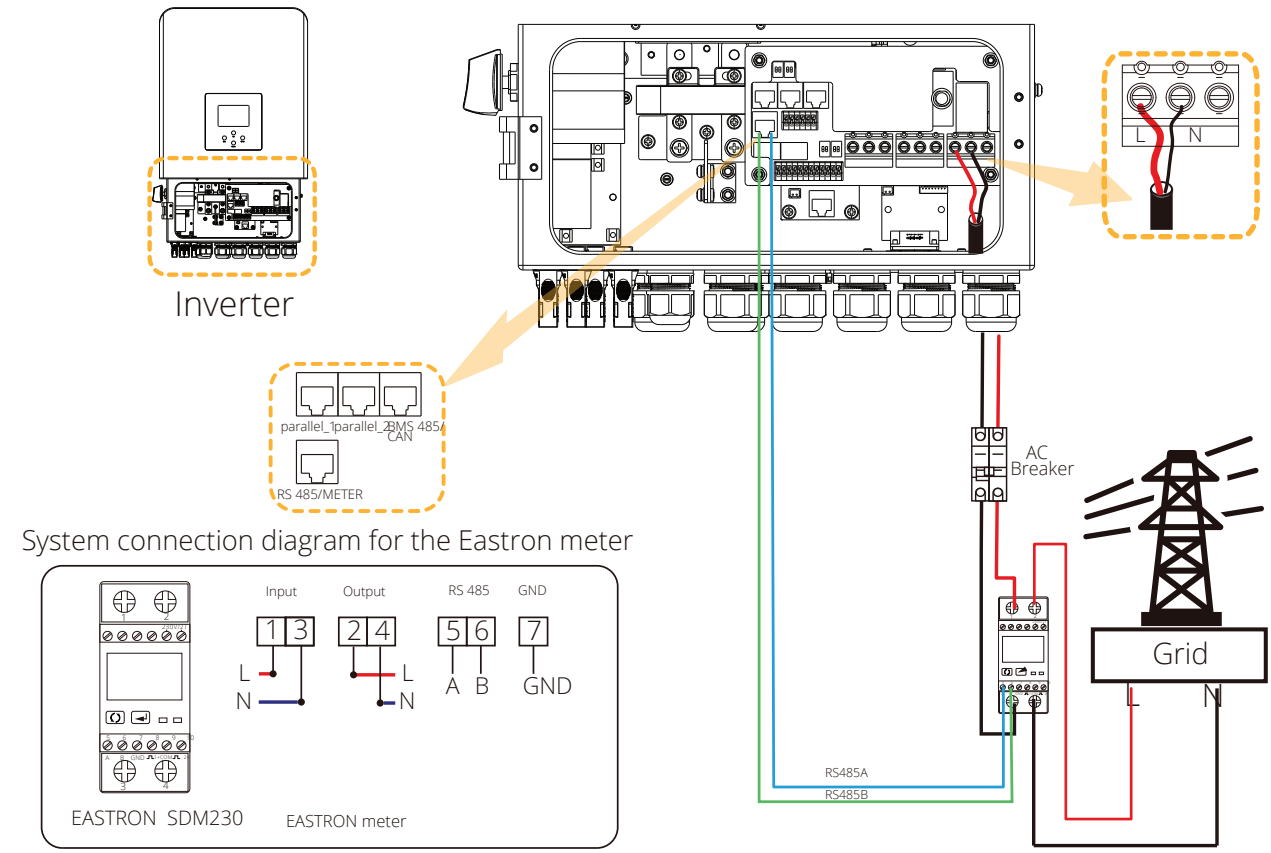

System connection diagram for the Eastron meter

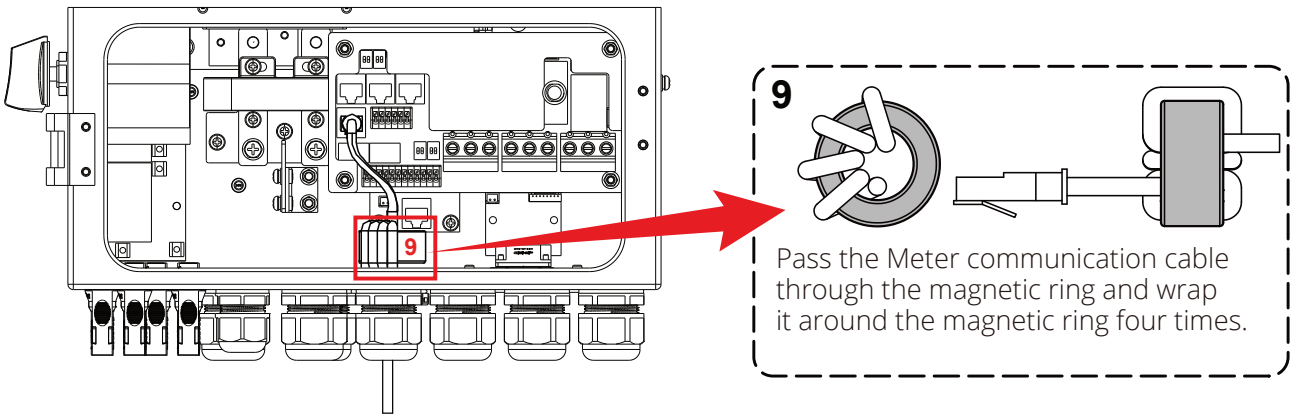

SUN SYNK®

Earth Connection (MANDATORY)

An Earth Cable shall be connected to the earth plate on the grid side in order to prevent electric shock if the original protective conductor fails.

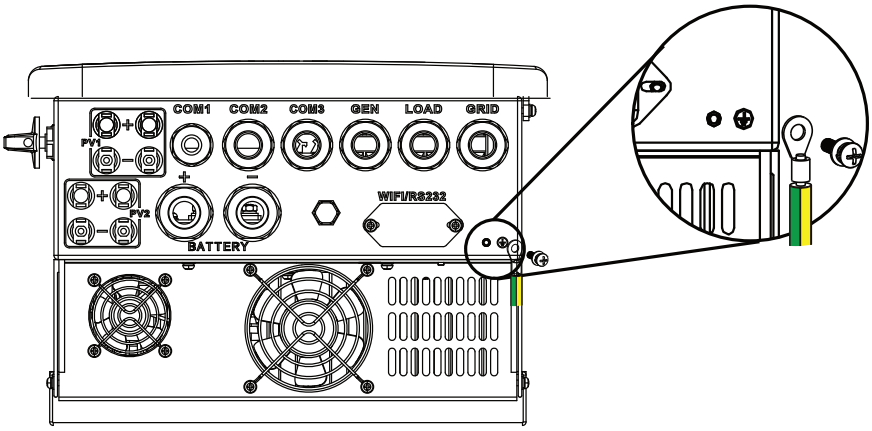

All neutrals can be linked together to maintain the neutral bond. When a Neural Earth bond is required for an 'Off-grid' operation, then it has to be removed on 'Grid-Tied' operation.

If an Earth Bond is required between neutral and earth and your system is a hybrid system, then you can have a permanent earth wire since this can cause faults with an RCD before the inverter.

Earth connection (Copper wires)

Model	Wire Size	Cable (mm²)	Torque Value (Max.)
7/7.6/8 kW	6AWG	10	1.2N.m

Earth connection (Copper wires) (Bypass)

Model	Wire Size	Cable (mm²)	Torque Value (Max.)
7/7.6/8 kW	6AWG	10	1.2N.m

NOTE:

Only for South Africa – Using a permanent PE/N bond on LOAD OUTPUT is recommended, and the supply power to the grid port needs to be taken from the mains before the main RCD to prevent RCD from tripping.

The bond we recommend being done in the external box clearly marked "permanent PE/N bond", and this has been advised by local authorities.

WARNING

Inverter has built-in leakage current detection circuit, The type A RCD can be connected to the inverter for protection according to the local laws and regulations. If an external leakage current protection device is connected, its operating current must be equal to 300mA or higher, otherwise inverter may not work properly.

Wiring System for Inverter

This diagram is an example for grid systems without special requirements on electrical wiring connection.
Note: The back-up PE line and earthing bar must be grounded properly and effectively.
Otherwise the back-up function may be abnormal when the grid fails.

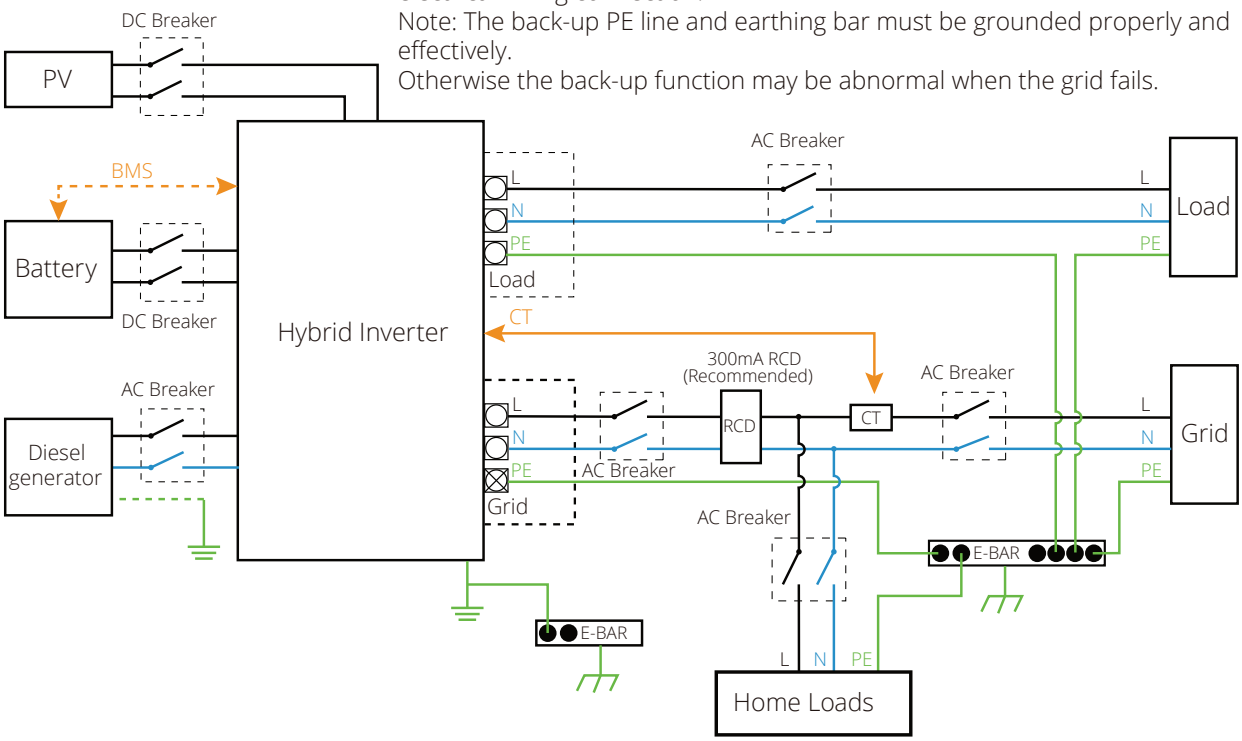

This diagram is an example for application that Neutral connects together with PE in distribution box.
Such as: Australia, New Zealand, etc. (Please follow local wiring regulations!)

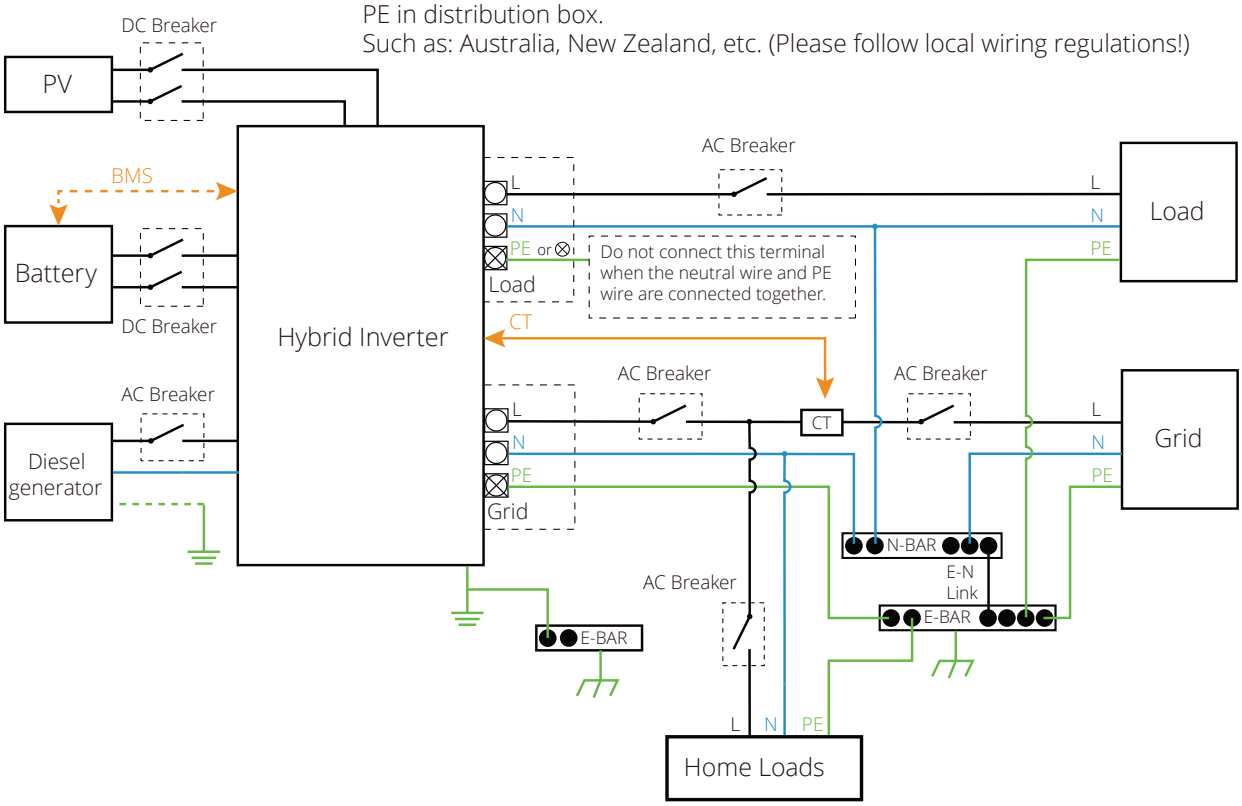

Typical Application of Diesel Generator

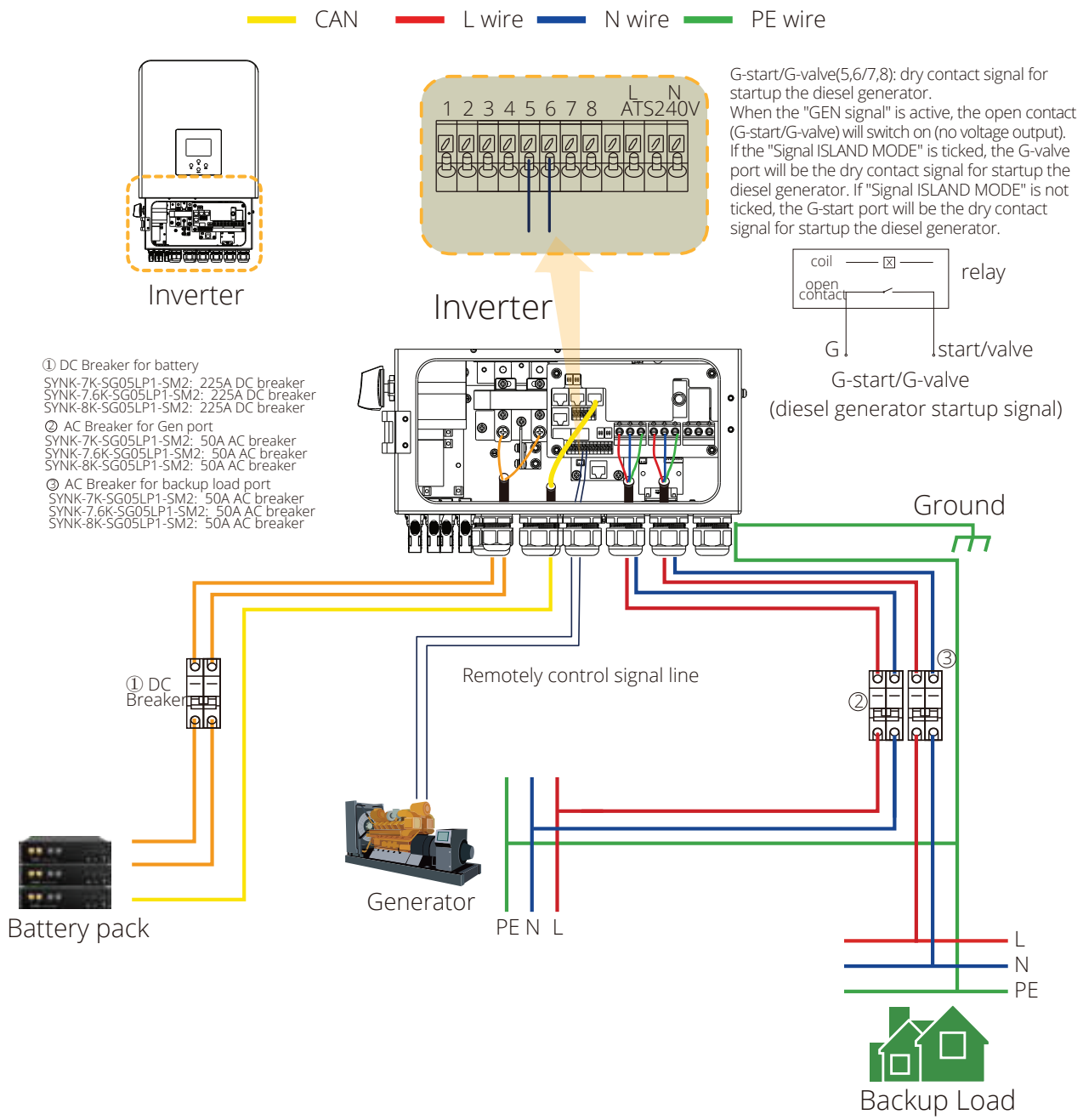

SUN SYNK®

Single-Phase Parallel Connection

Note: For the parallel system, please choose the "Zero export to CT " mode.

CAN L wire N wire PE wire

Inverter

parallel_1 parallel_2 BMS 485/CAN

RS 485/METER

Inverter No.3 (slave)

Ground

① DC Breaker

Inverter No.2 (slave)

④

⑤

①②③ DC Breaker for battery
SYNK-7K-SG05LP1-SM2: 225A DC breaker
SYNK-7.6K-SG05LP1-SM2: 225A DC breaker
SYNK-8K-SG05LP1-SM2: 225A DC breaker

④⑥⑧ AC Breaker for grid port
SYNK-7K-SG05LP1-SM2: 50A AC breaker
SYNK-7.6K-SG05LP1-SM2: 50A AC breaker
SYNK-8K-SG05LP1-SM2: 50A AC breaker

⑤⑦⑨ AC Breaker for backup load port
SYNK-7K-SG05LP1-SM2: 50A AC breaker
SYNK-7.6K-SG05LP1-SM2: 50A AC breaker
SYNK-8K-SG05LP1-SM2: 50A AC breaker

⑩ AC Breaker
Depends on Home Load

② DC Breaker

⑥

⑦

Inverter No.1 (master)

③ DC Breaker

⑧

⑨

Battery Pack

Backup Load

PE N L

⑩ AC Breaker

Home Load

CT

CT

Arrow pointing to inverter

The second side of the CT only needs to connect the master inverter.

L
N
PE

Master Inverter

Slave Inverter

Slave Inverter

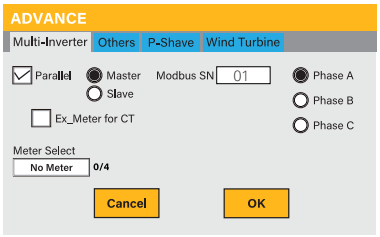

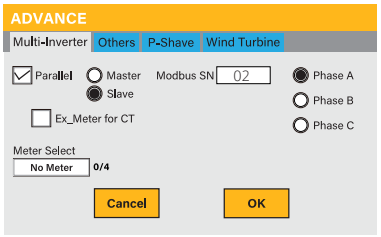

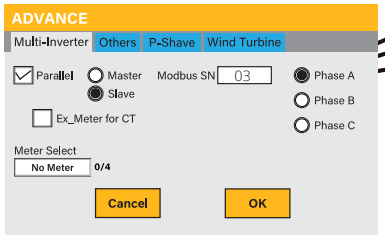

Grid

SUN SYNK®

Single-Phase Parallel Connection in a Three-Phase Grid System.

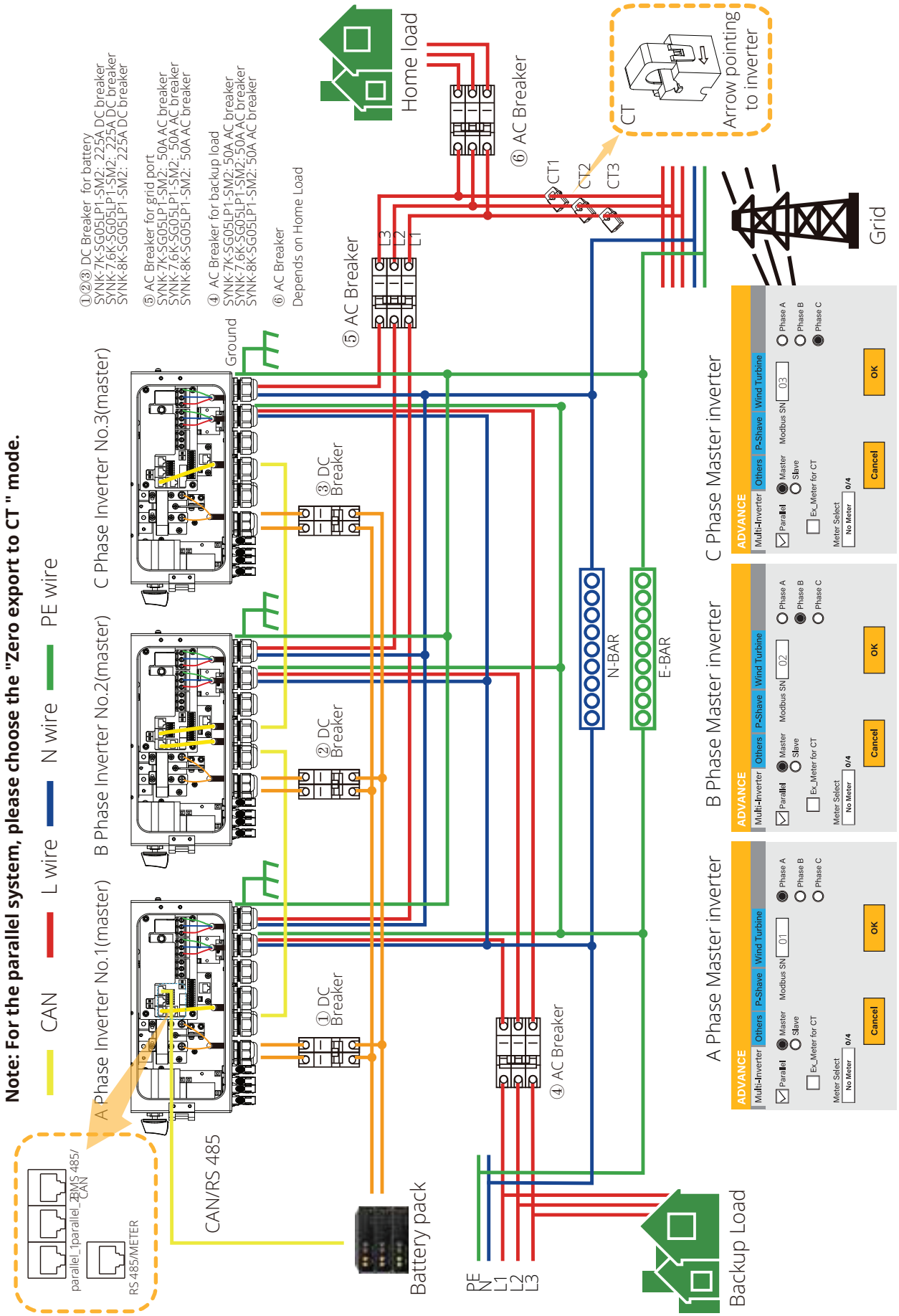

SUN SYNK®

OPERATION

Switching ON/OFF

Once the inverter has been correctly installed and the batteries have been connected, press the ON/OFF button (located on the left side of the case) to activate the system. When the system is connected without a battery but connected with either PV or grid and the ON/OFF button is switched off, the LCD will still illuminate (display will show off). In this condition, when switching on the ON/OFF button and selecting 'No Battery', the system can still work.

Display

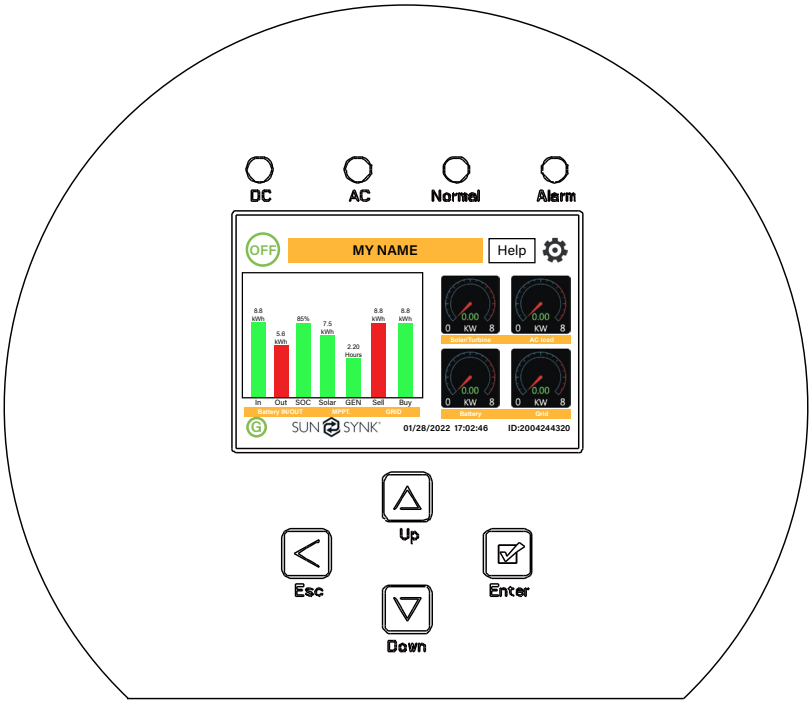

LED Indicators

LED indicator		Meaning
DC	Green LED solid light	PV connection normal
AC	Green LED solid light	Grid connection normal
Normal	Green LED solid light	Inverter functioning normally
Alarm	Red LED solid light	Fault

Function Buttons

Function Key	Description
Esc	To exit the previous mode
Up	Increase the value of a setting
Down	Decrease the value of a setting
Enter	Confirm setting change (If not pressed each time the setting will not be saved)

LCD Operation Flow Chart

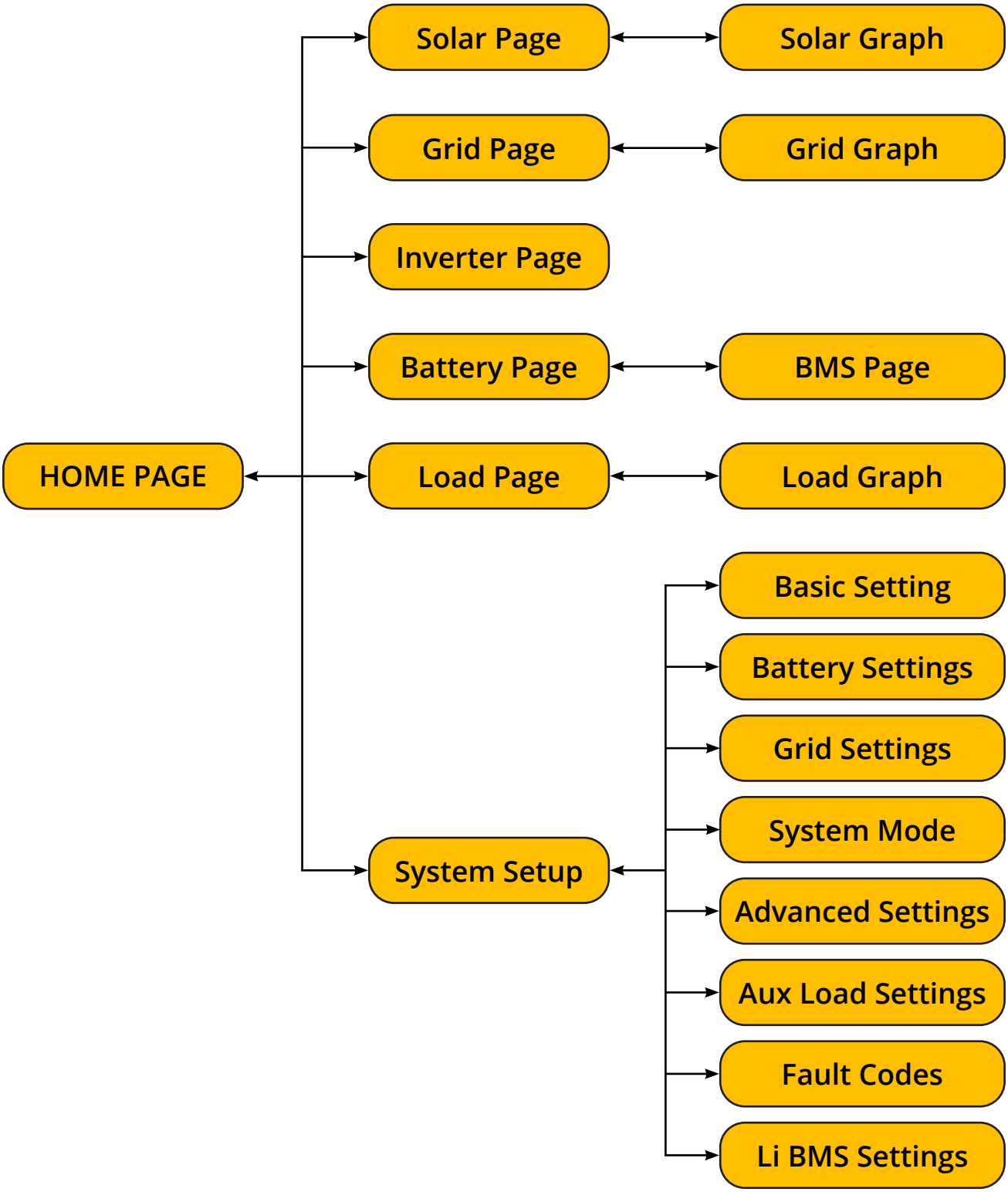

Home Page

Press the Esc button any page to access the home page:

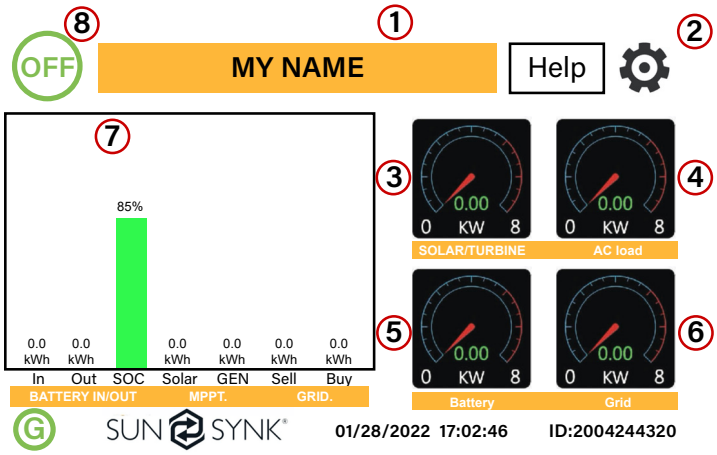

1. Customer name
2. Access the settings menu page
3. Access solar page
4. Access load page
5. Access battery page
6. Access grid page
7. Access system flow page
8. Access fault code displays.

The icon (8) indicates that the system is in Normal operation. If it turns into "comm./F01~F64", the inverter has communication errors or other errors, and the error message will display under this icon (F01-F64 errors, detail error info can be viewed in the System Alarms menu).

What this page displays:

- Total daily power into the battery (kWh).
- Total daily power out of the battery (kWh).
- SOC (State of charge of the battery) (%).
- Total daily solar power produced in (kWh).
- Total hourly usage of the generator (Time).
- Total daily power sold to the grid (kWh).
- Total daily power bought from the grid (kWh).
- Real-time solar power in (kW).
- Real-time load power in (kW).
- Real-time battery charge power in (kW).
- Real-time grid power in (kW).
- Serial number.
- Time date.
- Access the status page.
- Access the fault code displays.

Status Page

To access the Status page, click on the BATTERY or AC LOAD dial on the Home page.

0 Watts 0% (SOC) 0.00 Volts 0.00 Amps 0.0 C	0 Watts 0 Hz 0 Volts 0.0 Amps CT: 0 Watts LD: 0 Watts	0 Watts 0 Volts 0.0 Amps
Battery	**Grid Power**	**Solar Power 1**
0 Watts 50.0 Hz 0 Volts 0.00 Amps	0 Watts 0 Volts	0 Watts 0 Volts 0.0 Amps
Inverter Power	**Load Power**	**Solar Power 2**

What this page displays:

- Total solar power produced.
- MPPT 1 power/voltage/current.
- MPPT 2 power/voltage/current.
- Grid power.
- Grid frequency.
- Grid voltage.
- Grid current.
- Inverter power.
- Inverter frequency.
- Inverter voltage.
- Inverter current.
- Load power.
- Load voltage.
- Battery power charge/discharge.
- Battery SOC.
- Battery voltage.
- Battery current.
- Battery temperature.

Solar Column: Shows total PV (Solar) power, voltage and current for each of the two MPPT.

Grid Column: Shows grid total power, frequency, voltage, and current. When selling power to the grid, the power is negative. When consuming from the grid, the power is positive. If the sign of the grid and HM (home) powers are not the same when the PV is disconnected and the inverter is only taking energy from the grid and using the CT connected to Limit-2, then please reverse the polarity of the CT coil.
Important: See Section 'Connecting the CT coil'.

Inverter Column: Showing inverter total power, frequency, L1, L2, voltage, current, and power.

Load Column: Showing total load power, load voltage, and power on L1 and L2.

Battery Column: Shows total power from the battery, battery SOC, battery voltage, battery current (negative means charge, positive means discharge) battery temperature (shows zero if the battery temperature sensor is not connected). DC transformer temperature and AC heatsink temperature (When the temperature reaches 90°C, it will display in red, and the performance of the inverter will start deteriorating when it reaches 110°C. Subsequently, the inverter will shut down to allow it to cool and reduce its temperature.

System Flow Page

Access by clicking on the bar chart on the Home Page.

To better understand the functioning of your system, take a look at the figure at right:

1. The PV modules charge the batteries.
2. When the batteries reach a specific level (programmable), the battery power is fed into the inverter.
3. The inverter can then supply power to the grid (export or no export), load, and auxiliary or smart load.
4. CT coil controls the export power.

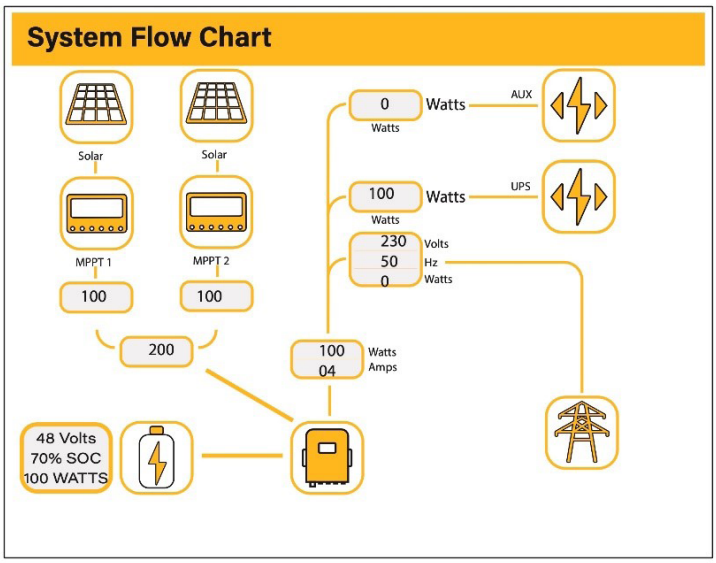

What this page displays:

- The system flow.
- MPPTs power.
- Battery status.
- Power distribution to load or grid.

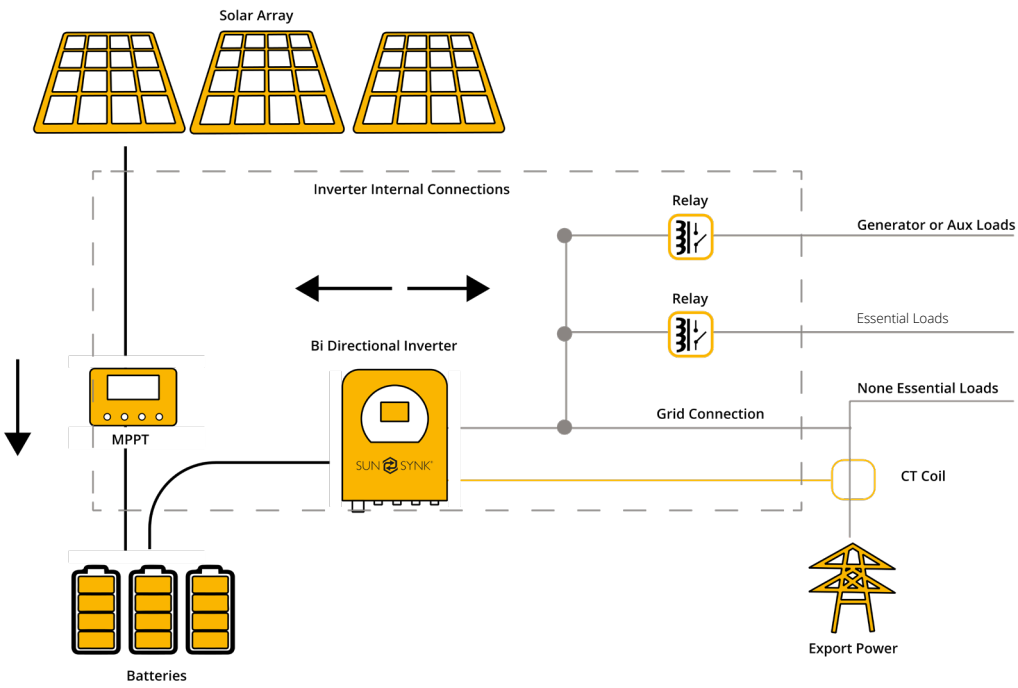

Setup Page

To access Settings, click on the gear icon on the right top of the navigation menu.

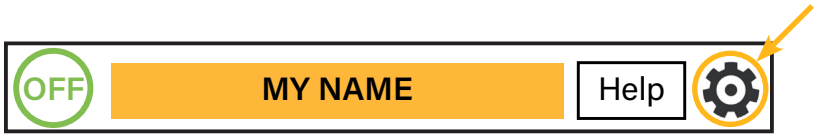

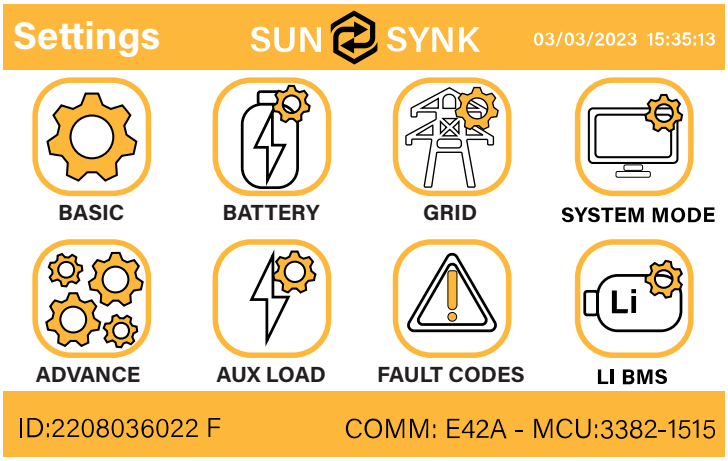

What this page displays:

- Serial number.
- Software version.
- Time, Date, and MCU.

What you can do from this page:

- Access the Basic Setup Page (press the BASIC icon).
- Access the Battery Setup Page (press the BATTERY icon).
- Access the Grid Setup Page (press the GRID icon).
- Access the real-time programmable timer/system mode (press the SYSTEM MODE icon).
- Access the advanced settings such as Paralleling and Wind Turbine (press the ADVANCE icon).
- Access the auxiliary load/smart load settings (press the AUX LOAD icon)
- Access the fault code register (press the FAULT CODES icon).
- Set up Li BMS (press the LI BMS icon).

Basic Setup

Set Time (Clock)

To set time, click on the BASIC icon and then on 'Time'

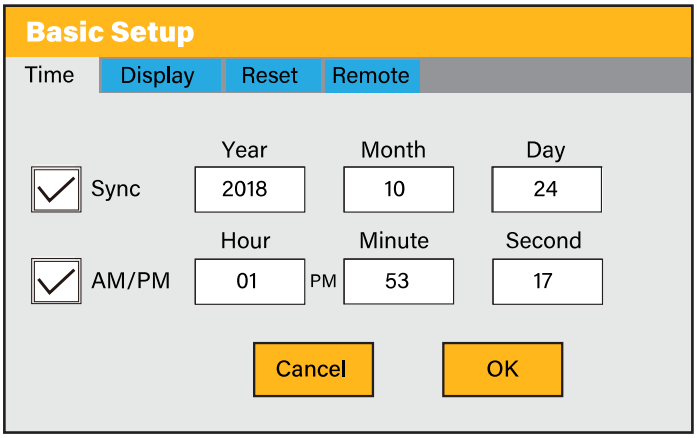

What this page displays:

- Time.
- Date.
- AM/PM.

What you can do from this page:

- Adjust / set time.
- Adjust / set date.
- Adjust / set AM/PM.

How to set up:

- Touch the screen on the box you wish to change.
- Change the number (increase/decrease) using the UP and DOWN buttons.
- Press OK to set the changes.

Set Company Name / Beeper / Auto dim

To set company name click on the BASIC icon and then on 'Display'.

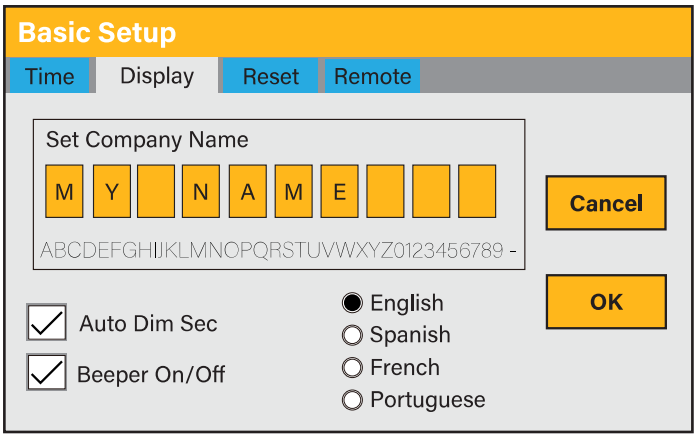

What this page displays:

- Beeper status (ON/OFF)
- Installers names.

What you can do from this page:

- Set up your company name.
- Switch the beeper ON or OFF.
- Set the LCD backlight to auto dim.

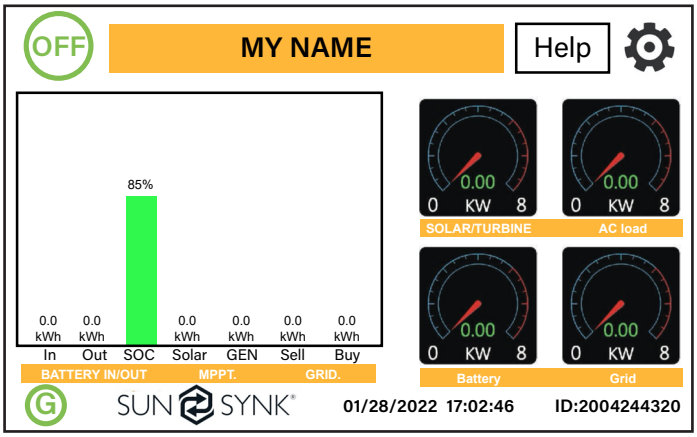

How to change the name:

Change the letters in each box by moving the arrows up and down and then select OK. This will change the name on the home screen.

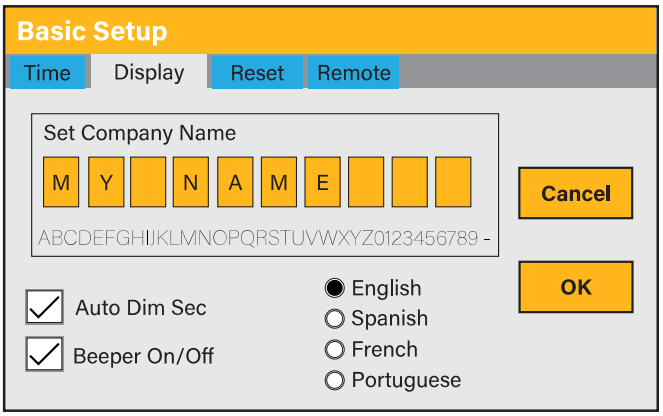

How to set the auto dim:

Set a number in the auto dim box to dim the LCD after a number of seconds.

How to turn the beep on or off:

Check or uncheck the beep box and the press OK to configure it as you prefer.

Factory Reset and Lock Code

To access the Settings, click on the gear icon on the right top of the menu.

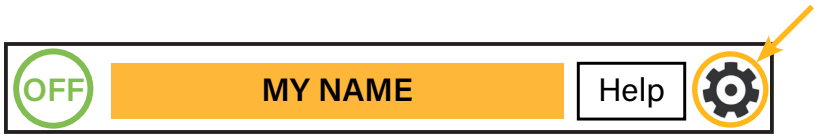

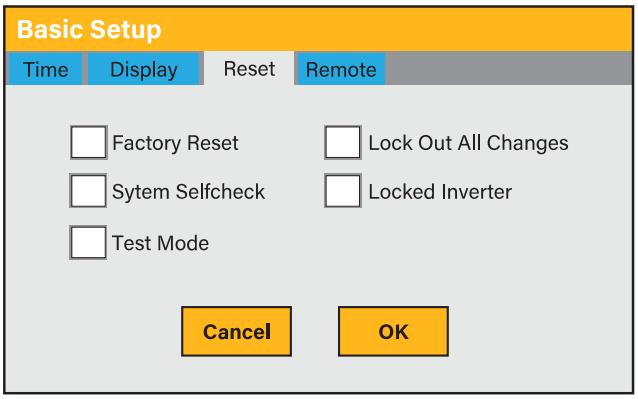

What this page displays:

- Reset status.
- Whether the 'lock code' is used or not.

What you can do from this page:

- Reset the inverter to the factory settings.
- System diagnostics.
- Change or set the 'lock code'.

- **Factory Reset:** Reset all parameters of the inverter.
- **Lock out all changes:** Enable this menu to set parameters before the unit is locked and cannot be reset.

***Before performing a successful 'Factory Reset' and locking the systems, the user must enter a password to allow the setting to take place. The password for 'Factory Reset' is 9999 and for lockout is 7777.**

- **System self-check:** Allows the user to conduct a system diagnosis. After ticking this item, it needs input the password. The default password is 1234.
- **Locked Inverter:** This function is used to lock the inverter completely so no access can be gained. It will ask for a 5-digit code that only the Sunsynk Technical staff can assist with.
- **Test mode (only for engineers):** For engineers to conduct tests.

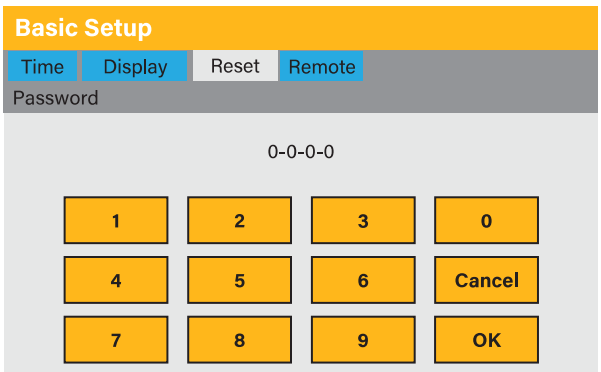

Inverter Remote Control

To control the inverter remotely, tick the box that allows it.

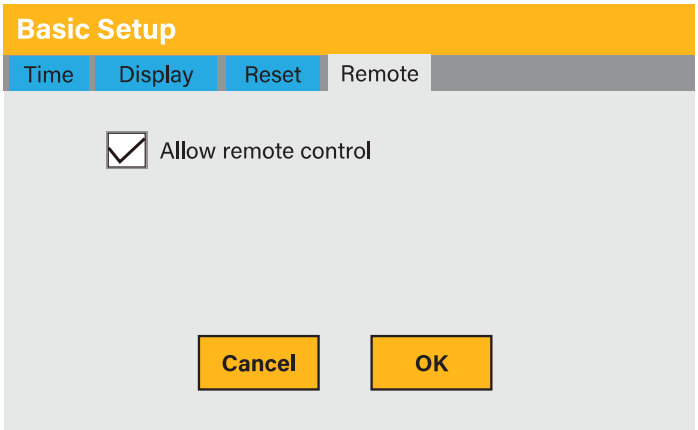

What this page displays:

- Remote control option.

What you can do from this page:

- Allows remote control of the inverter.

Battery Setup Page

To configure battery settings, click on the BATTERY icon and then on 'Batt type'.

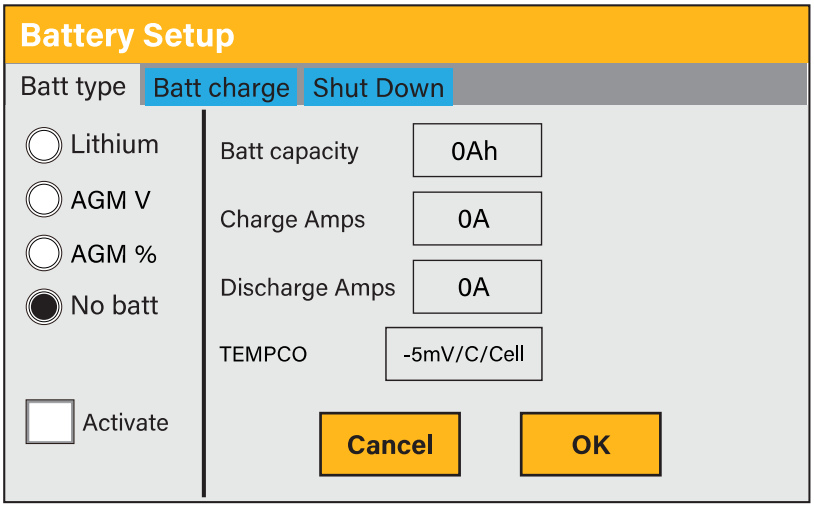

What this page displays:

- **Lithium:** This is BMS protocol. Please reference the document (Approved Battery).
- **AGM V:** Use battery voltage for all settings (V).
- **AGM %:** Use battery SOC for all settings (%).
- **No batt:** Tick this box if no battery is connected to the system. If it's ticked and the CT coil is connected, the inverter operates as a grid-tied inverter.
- **Battery capacity in (Ah):** For non-BMS-batteries the range allowed is 0-2000Ah, while for lithium-ion, the inverter will use the capacity value of the BMS.
- **Charge/Discharge Amps:** The Max battery charge/discharge current (0-175A for 7kW model, 0-190A for 7.6/8kW model).
- **Active battery:** This feature will help recover a battery that is 100% discharged by slowly charging from the solar array. Until the battery reaches a point where it can charge normally.
- **TEMPCO settings:** The temperature coefficient is the error introduced by a change in temperature.

NOTE:

Recommended:

AGM and Flooded: Ah battery size x 20% = Charge/Discharge amps.

Lithium: Ah battery size x 50% = Charge/Discharge amps.

Gel: follow manufacturer' s instructions.

Generator & Battery Page

To configure battery charging settings, click on the BATTERY icon and then on 'Batt Charge'.

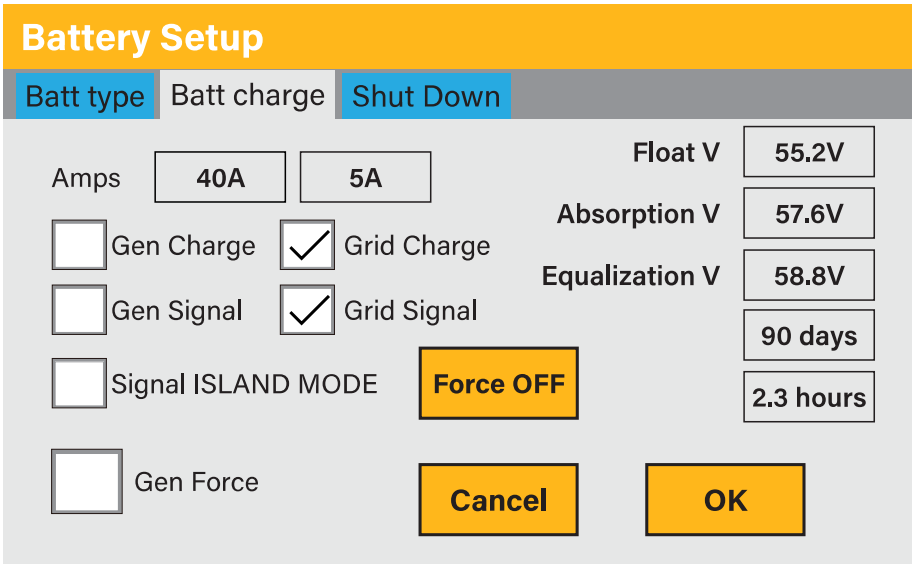

What this page displays:

- **Amps:** Charge rate of 40A from the attached generator in Amps.
- **Grid Amps:** Current that the grid charges the battery.
- **Grid Charge:** It indicates that the grid will charge the battery.
- **Grid Signal:** This indicates when the grid should no longer charge the battery.
- **Gen Charge:** Uses the GEN input of the system to charge the battery bank from an attached generator.
- **Gen Signal:** Normally open (NO) relay that closes when the Gen Start signal state is active.
- **Gen Force:** When the generator is connected, it is forced to start without meeting other conditions.
- **Force OFF:** This is to force the generator to switch off.
- **Signal ISLAND MODE:** When "signal island mode" is checked and the inverter connects the grid, the ATS port voltage will be 0. When "signal island mode" is checked and the inverter is disconnected from the grid, the ATS port voltage will output 230Vac. This feature and outside NO type relay can realize N and PE disconnection or bond.
- **Float V:** The voltage at which a battery is maintained after being fully charged. Float V for an AGM battery is 55.20V.

- **Absorption V:** The level of charge that can be applied without overheating the battery. Absorption V is for an AGM battery is 57.60V.
- **Equalization V:** Equalizing charge/overcharge to remove sulphate crystals that build up on the plates over time on lead-acid batteries. Equalization V for an AGM battery is 58.80V.

NOTE:

Do not alter these settings too often on the same battery, as it may damage the battery.

Recommended battery settings:

Battery Type	Absorption Stage	Float Stage	Voltage (every 30 days 3hr)
AGM (or PCC)	14.2V (57.6V)	13.4V (53.6V)	14.2V (57.6V)
Gel	14.1V (56.4V)	13.5V (54.0V)	
Wet	14.7V (59.0V)	13.7V (55.0V)	14.7V (59.0V)
Lithium	Follow its BMS voltage parameters		

A generator can either be connected to the Grid side or to the Gen connection. When connected to the Grid Input, the inverter will consider the power coming from the generator as 'Grid Supply'. Users should ensure this power goes to the LOAD only and should not be exported to other outlets, as this will damage the generator.

If the generator is connected to the inverter and a generating signal exists, the inverter will switch 100% of the load to the generator and then slowly increase the charging currents to the batteries. Therefore, the generator must be able to supply both the charge current and the total load current.

The generator can be controlled via a relay with a set of dry-contacts to enable remote control. The current on the contacts is limited to approximately 1Amp 12V.

Below is a simple reference circuit of an auto-start system that can auto-start generators on a boat. (Sunsynk will be releasing a new OS E406 (Auto-Start) for better generator control).

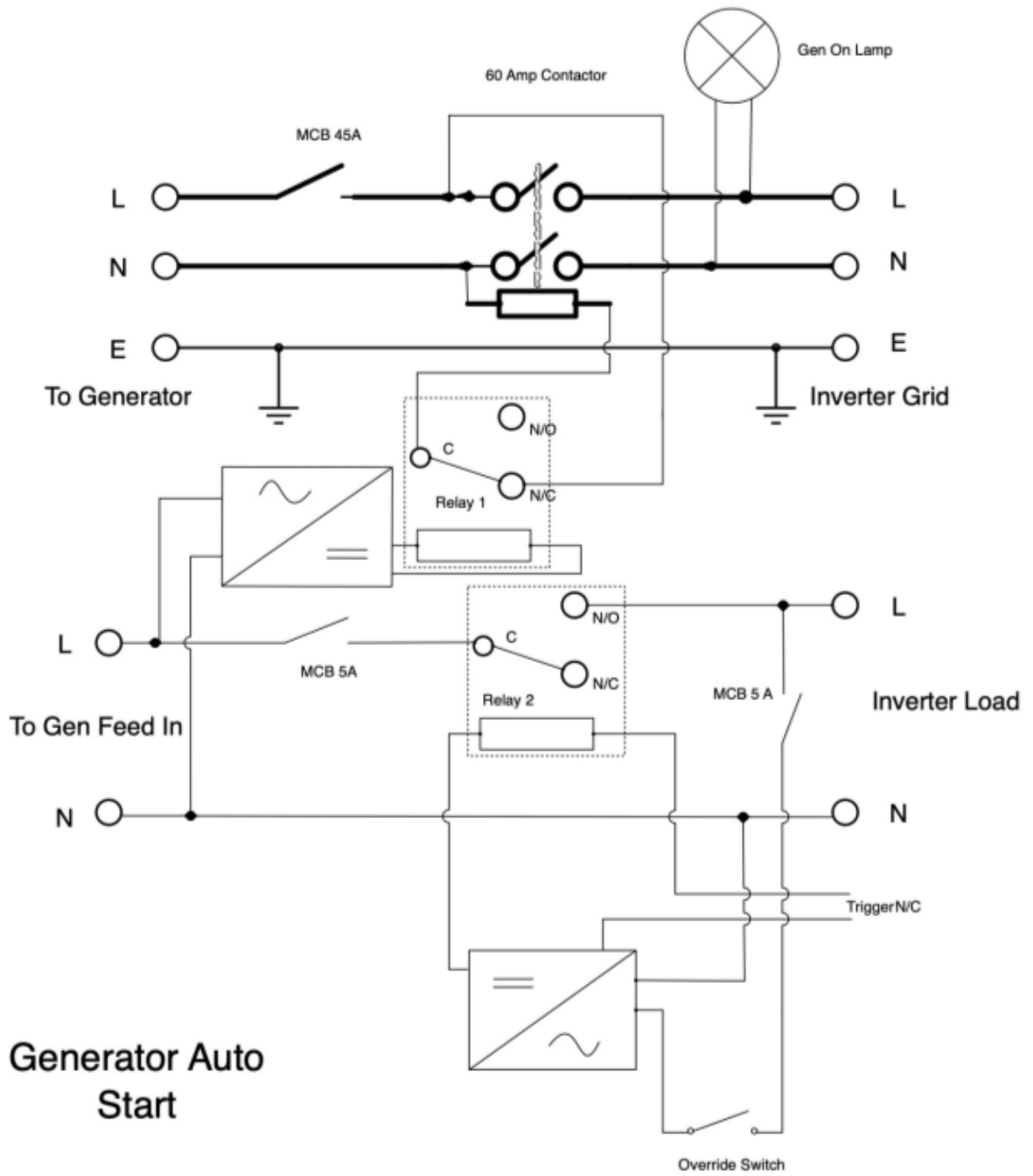

Battery Discharge Page

To configure inverter's shut-down settings, click on the BATTERY icon and then on 'Shut Down'.

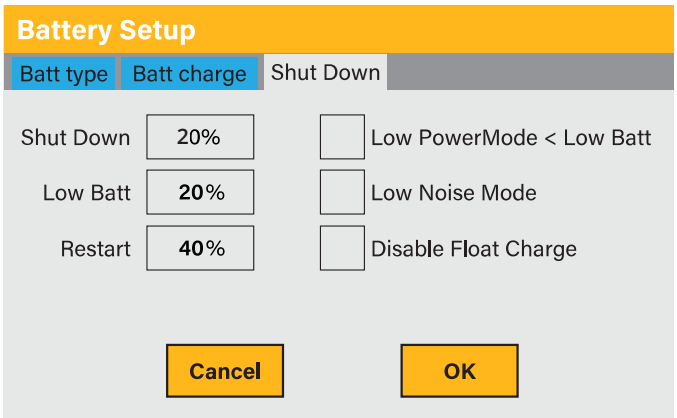

What this page displays:

- **Shutdown 20%:** It indicates the inverter will shutdown if the SOC is below this value.
- **Low Batt 20%:** It indicates the inverter will alarm if the SOC below this value.
- **Restart 40%:** Battery voltage at 40% AC output will resume.
- **Low Power Mode<Low Batt:** If selected and when battery SOC is less than the "Low Bat" value, the self-consumption power of the inverter will be from the grid and battery simultaneously. If unselected, the self-consumption power of the inverter will be mainly from the grid.
- **Low Noise Mode:** Low noise mode is used to change the switching frequency of the IGBTs from 15kHz to 20kHz, we did this because 15kHz was in the audible range still meaning that people with great hearing could hear a high pitch noise when using other electrical products, the inverter interacted with it on the AC line with electrical noise.
- **Disable Float Charge:** A battery has three stages of charging, bulk, absorption, and float. Once the third stage has been reached which will be the float charge the inverter gradually charges the battery. Sometimes, this results in the batteries being overcharged so enabling this function it will disable the third stage in the charging cycle which is float charge.

What you can do from this page:

- Adjust battery shut down (voltage or %)
- Adjust low battery warning (voltage or %)
- Adjust restart (voltage or %)

NOTE:

Activating Shutdown causes the inverter to enter standby-mode. It does not entirely shut down the inverter. Total shutdown occurs at voltages below 19V.

The voltage displayed on the Sunsynk Parity Inverter will vary depending on whether the inverter is charging or discharging the batteries.

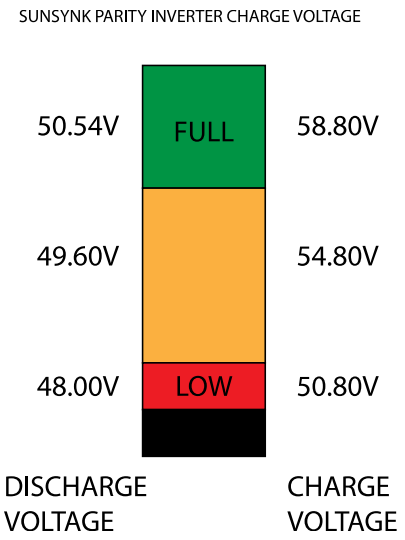

Since the batteries are 48V, the figure on the left is x4:

- Fully Charged 50.54V (Discharge Mode)
- Fully Charged 58.80V (Charge Mode)
- 75% Charged 49.60V (Discharge Mode)
- 75% Charged 54.80V (Charge Mode)
- 25% Charged 48.00V (Discharge Mode)
- 25% Charged 50.80V (Charge Mode)
- Completely Discharged 47.50V

Setting the cut-off higher is better for the batteries.

The batteries recommended for use with the Sunsynk systems are AGM Lead Acid or Lithium Battery Banks. At its core, an AGM is still a lead-acid battery. AGM stands for Absorbent Glass Mat, which refers to the technology these devices use to create power. This fiberglass mat sits between the positive and negative lead plates of your battery. Then, as the name suggests, it absorbs and holds the battery acid. That way, it doesn't freely flow around the battery.

State of Charge

Bulk: The bulk charge is the first stage of a battery's charging process, where the charger identifies the battery and its needs and then applies a high voltage to do the bulk of the charging. It involves about 80% of the recharge. The properly sized charger will give the battery as much current as it will accept up to charger capacity (25% of battery capacity in Amp hours).

Absorption: To fully charge a battery, a period of charging at a relatively high voltage is needed. This period of the charging process is called absorption. This occurs when the charging of a battery has reached 80% of its capacity. The remaining charge equals 20% approximately. It makes the charger hold the voltage at the charger's absorption voltage (between 14.1 VDC and 14.8 VDC, depending on charger set points) and decreases the current until the battery is fully charged.

Float: The charging voltage is reduced to between 13.0 VDC and 13.8 VDC and held constant, while the current is reduced to less than 1% of battery capacity. This mode can be used to maintain a fully charged battery indefinitely.

Equalisation: This is essentially a controlled overcharge that occurs at the end of the Bulk mode and the absorption phase and is called the 'equalisation voltage'. However, technically, this phase has another function. Higher capacity wet (flooded) batteries sometimes benefit from this procedure, particularly the physically tall batteries. The electrolyte in a wet battery can stratify over time if not cycled occasionally. In equalisation, the voltage is brought up above the typical peak charging voltage well into the gassing stage and maintained for a fixed (but limited) period. This stirs up the chemistry in the entire battery, 'equalising' the strength of the electrolyte and knocking off any loose sulphating that may be on the battery plates.

Setting Up a Lithium Battery

To set up a lithium-ion battery, click on the BATTERY icon and visit the 'Batt Type' column.

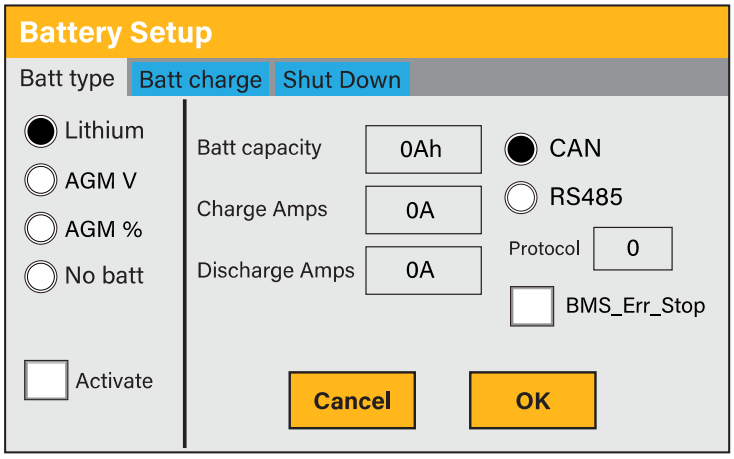

What this page displays:

- This information will only display if the 'Lithium' option is selected under 'Batt Type'.
- The type of communion protocol.
- Approved batteries.

What you can do from this page:

- Set up you Lithium-ion battery.

After installing a lithium battery, check the communications page by clicking on the 'Li BMS' icon to see if the BMS information is visible. Suppose some information is not displayed correctly (it should look like the diagram below), then there will be a communication error.

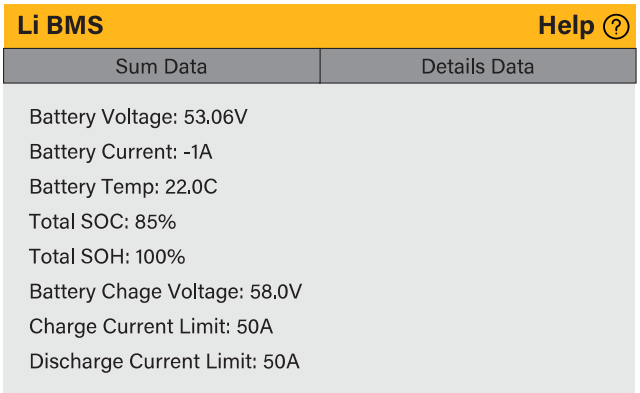

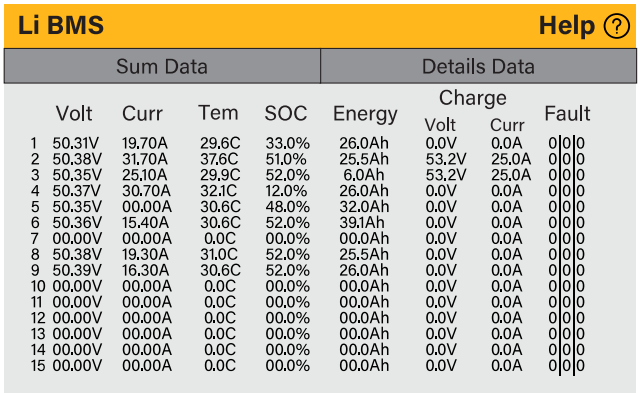

Therefore, if a communication error occurs:

1. Check that your data cable is the correct type.
2. Check that the data cable is plugged into the correct sockets. Usually, RS485 is employed, but some battery manufacturers use others.

NOTE:

With some types of lithium batteries, the BMS cannot be controlled by the Sunsynk inverter. In this case, treat the battery as a lead-acid type and set the charging and discharging protocol following the battery manufacturer's specifications.

It is crucial to refer to the manuals that manufacturers produce for their batteries. That way, the chance of errors occurring during installation is significantly reduced. Below is a list of batteries that have been examined, tested, and approved by Sunsynk.

Brand	Model	48V Storage Inverter	RS485 or CAN	Inverter Setup	Notes
DYNESS	B4850	✓	CAN	0	
	POWERBOXF			0	
	A48100			0	
SunketESS	LFP5000	✓	CAN	0	
Osily	LFP5KWH/LV	✓	CAN	0	
HUBBLE	AM-2 5.5KW	✓	CAN	0	
	AM-5		CAN	0	CANH = Pin 4 CANL = Pin 5
	AM-10		CAN	0	
SACRED SUN	SSIF2P15S48100C	✓	RS485	1	Cut Line 3, 6, 8
	FCIFP48100A		RS485	1	
	SSIFP48100A		RS485	1	
SHOTO	SDC-Box5(5.12KWH)	✓	CAN	0	

Brand	Model	48V Storage Inverter	RS485 or CAN	Inverter Setup	Notes
SolarMD	SS4074	✓	CAN	0	To be used with V2 Logger http://solarmd.co.za/inverter-compatibility-solarmd/sunsynk-and-solar-md/
	SS4037			0	
	SS202			0	
	SS4143			0	
	SS4083			0	
	SS214			0	
PYLON	US2000B	✓	CAN	0	
			RS485	12	
	US3000		CAN	0	
			RS485	12	
	US2000C		CAN	0	
			RS485	12	
	US3000C		CAN	0	
			RS485	12	
	UP5000		CAN	0	
			RS485	12	
	US5000		CAN	0	
			RS485	12	
	Force L1		CAN	0	
			RS485	12	
	Force L2		CAN	0	
			RS485	12	
UZ ENERGY	L051100-A	✓	CAN	0	
	L051100-A1		CAN	0	
	L051100-B		CAN	0	
	L051100-D		CAN	0	
GenixGreen	ESS-5120	✓	RS485	6	
	ESS-10240		RS485	6	
	ESS-BOX2		RS485	6	
	ESS-BOX3		RS485	6	
	ESS-BOX4		RS485	6	
	ES-BOX2		RS485	6	
	ES-BOX5		RS485	6	
	ES-BOX12		RS485	6	
Sunwoda	H4850M	✓	CAN	0	
	SunESS		CAN	0	
	Atrix		CAN	0	
APIUM	AP-5	✓	CAN	0	
	APR-5		CAN	0	
VISION Group	V-LFP51.2V100Ah-5KW	✓	CAN	13	
	VLFP51.2V200Ah-5KW		CAN	13	

Brand	Model	48V Storage Inverter	RS485 or CAN	Inverter Setup	Notes
Alpha Ess	M4856-P	✓	CAN	0	
	SMILE BAT		CAN	0	
BYD	BYD Battery-Box LV Flex Lite	✓	CAN	0	
Greenrich	AU5500(UP3686)	✓	CAN	0	
	AU7500(UP5000)			0	
	AU9000(UP6100)			0	
	AW7500(WM5000)			0	
	SSRE-EU10K			0	
TOPBAND	TB51100F-T110	✓	CAN	0	
	TB51120-T110		CAN	0	
Weco	4K4 LV	✓	CAN	0	
	5K3 LV		CAN	0	
GSL ENERGY	GSL051100A-B-GBP2	✓	CAN	0	
	GSL051200A-B-GBP2		CAN	0	
	GSL051280A-B-GBP2		CAN	0	
	ZnP48100ESA1		CAN	0	
	GSL-51-100		CAN	0	
	GSL-51-200		CAN	0	
DOWELL	IPACK C3.3	✓	CAN	0	
	IPACK C6.5		CAN	0	
	IPACK C10		CAN	0	
Giter	G2500-48V	✓	CAN	0	
	G5040-48V		CAN	0	
CF Energy	CFE2400	✓	CAN	0	
	CFE5100		CAN	0	
	CFE5100S		CAN	0	
Deye	SUNB-5.0-G01-48-PC SE-G5.1 PRO/AI-W5.1/ RW-M6.1	✓	CAN	0	
AOBOET	Uhome-LFP 5000	✓	CAN	0	
	Uhome-LFP 2400		CAN	0	
Wattsonic	Li-LV battery series	✓	RS485	14	
KODAK	FL5.2	✓	CAN	0	
Fox ess	LD-48100P	✓	RS485	1	
PYTES Energy	E-BOX 48100R	✓	CAN	0	
BST	MD48-100	✓	CAN	0	
	MD48-50		CAN	0	
Rosen Solar Energy	LFP48V200AH	✓	CAN	0	
	LFP51.2V200AH		CAN	0	
Highstart	HSD4870	✓	CAN	0	

Brand	Model	48V Storage Inverter	RS485 or CAN	Inverter Setup	Notes
BALANCELL	P26	✓	CAN	0	
	P27		CAN	0	
Photon	PTN-BAT-05K-WM-LFP (5KWh / 100Ah)	✓	CAN	0	CANH = Pin 4 CANL = Pin 5
ZRGP	ZR-FC48100-1630J1	✓	CAN	0	
	ZR-FS4850-16OSJ1		CAN	0	
	ZR-FS48100-16OSJ1		CAN	0	
	ZR-PBX1		CAN	0	
UFO	U-P48200-7	✓	CAN	0	
	U-P48100-7		CAN	0	
	U-P48150-1		CAN	0	
DMEGC	L01-48100	✓	CAN	0	
	L02-48200		CAN	0	
Robuste	LR48100	✓	CAN	0	
	LR48200		CAN	0	
Soluna	4K Pack	✓	CAN	0	
	5K Pack		CAN	0	
	EOS-5K Pack		CAN	0	
REVOV	R100	✓	CAN	0	
PAND	Powerfree Rack	✓	CAN	0	
	Powerfree Cube	✓	CAN	0	
CLiS (Zhongneng Lithium Battery Technology Taizhou Co., Ltd.)	Enerhi-M Series	✓	CAN	0	
LBSA	LBSA 51.2V/100Ah	✓	CAN	0	
Freedomwon	Freedomwon Lite Commercial 52V and LV Models	✓	CAN	0	
GSO	GBP48	✓	CAN	0	
Sunketess	LFP5000	✓	CAN	0	
Vestwoods	VT Series	✓	CAN	0	
	VE Series		CAN	0	
Green Solutions Inc.	HOME E10	✓	CAN	0	
nRuiT Energy	PowerPorter 5.0/9.0/10.0/12.0/15.0	✓	CAN	0	
Far East Battery	FEB LV Series	✓	CAN	0	
GEN2	Gen2 P48200-7	✓	CAN	0	
	Gen2 P48100-7		CAN	0	
	Gen2 P48150-1		CAN	0	

Brand	Model	48V Storage Inverter	RS485 or CAN	Inverter Setup	Notes
LEMAX	LM-JW-51.2V100Ah	✓	CAN	0	
	LM-JW-51.2V200Ah		CAN	0	
COOLI	CLR5KWH	✓	CAN	0	
	CLW5KWH		CAN	0	
	CLR10KWH		CAN	0	
	CLW10KWH		CAN	0	
	CLH10KWH		CAN	0	
	ESS10240		CAN	0	
VOLTA	VOLTA STAGE1	✓	CAN	0	
	VOLTA STAGE2		CAN	0	
	VOLTA STAGE3		CAN	0	
	VOLTA STAGE4		CAN	0	
EVO	EVO 5.7KWH 48V-120Ah	✓	CAN	0	
Yoshopo	BB-LFP-100Ah-P	✓	CAN	0	
BNP	51.2V 100Ah	✓	CAN	0	
Shanghai Green Tech Co.,Ltd.	GTEM-48V2500	✓	RS485	12	
Unipower	UPI.FP4845	✓	RS485	15	
LD	LD-100P210J	✓	RS485	17	
Felicity	LPBF Series	✓	RS485	12	
	LPBA-OL Series		RS485	12	
	LPBA-IL Series		RS485	12	
BSL	B-LFP51.2V 100Ah	✓	CAN	0	Float voltage 54.5V Absorption V 55.00V Disable equalisation 0 Days Shutdown 20% Low Batt 35% Restart 50%
	B-FLP51.2V 125Ah				
	B-LFP48-130E 51.2V 130Ah				
	B-LFP48-160E 51.2V 160Ah				
	B-LFP51.2V 200Ah Pow-erwall				
Enersol Lithium	48-100	✓	CAN	0	BMS cable – straight RJ45 cable (no need to change pin outs on cable) Dip Switch settings is 1000 (for single battery)
	51-100		CAN	0	CANH = Pin 4 CANL = Pin 5
	51-200		CAN	0	
	51-100WM		CAN	0	
	51-200WM		CAN	0	
Blue Nova Rackpower	RacPower BN52-100-5.2K BP	✓	CAN	0	
	RacPower BN52-100-5.2K DU		CAN	0	

Brand	Model	48V Storage Inverter	RS485 or CAN	Inverter Setup	Notes
Blue Nova HC	BN52V-280-14.5K HC	✓	CAN	0	Can be used with or without BMAC
	BN52V-560-29K HC		CAN	0	https://www.bluenova.co.za/wp-content/uploads/2015/11/BN-User-Manual-HC_v102.pdf
	BN52V-840-43.6K HC		CAN	0	
	BN52V-1120-58.2K HC		CAN	0	CANH = Pin 7
	BN52V-1400-72.8K HC		CAN	0	CANL = Pin 8
Blue Nova Rack Series	BN52V-840-43.6K BR	✓	CAN	0	BlueNova-BMAC-Manual-v4.pdf
	BN52V-1120-58.2K BR		CAN	0	

NOTE:

When communications between the battery and inverter do not exist, do not overcharge your battery bank (current or voltage). Many lithium batteries are limited to 100A, some are lower, and some are higher. Ensure that voltage and current specifications provided by the battery manufacturer are followed.

If you are using lead acid batteries, then follow the equation of C x 0.25, which means that the maximum charge or discharge you can apply to a battery is a quarter of the AH rating of the overall battery array. E.g.: A 200Ah battery array composed of 4 x 200Ah batteries in series has a maximum discharge of only 50Ah (200 x 0.25 = 50)

Also, ensure the cable is thick enough to support the current and that the connected fuses are of the correct rating per the battery manufacturers' recommendations.

Charge & Discharge Times Program

To set 'Charge' and 'Discharge' times, click on the 'System Mode' icon after clicking on the gear icon.

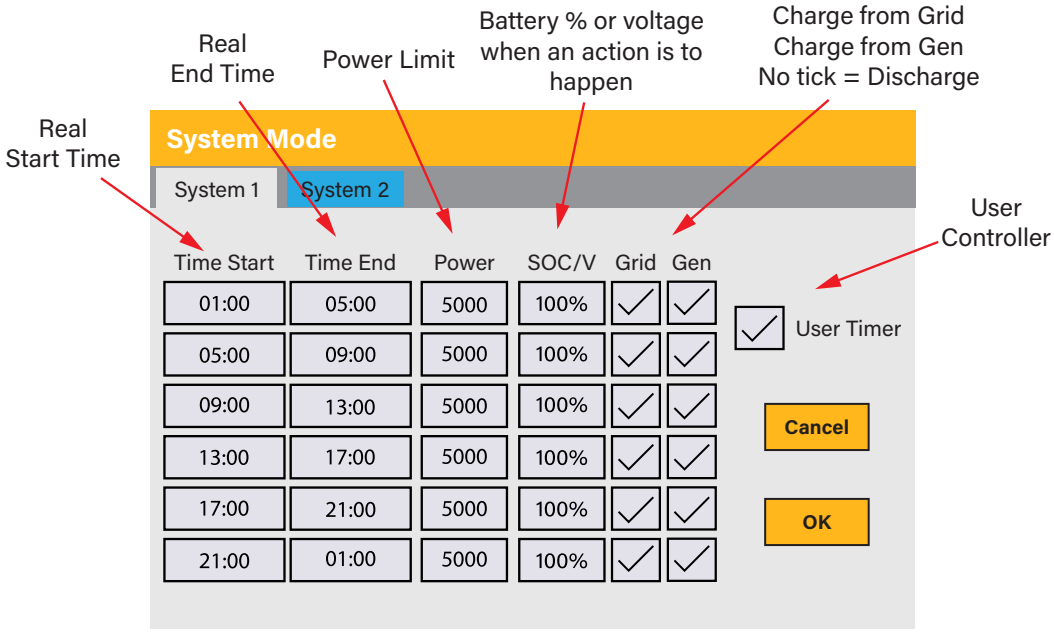

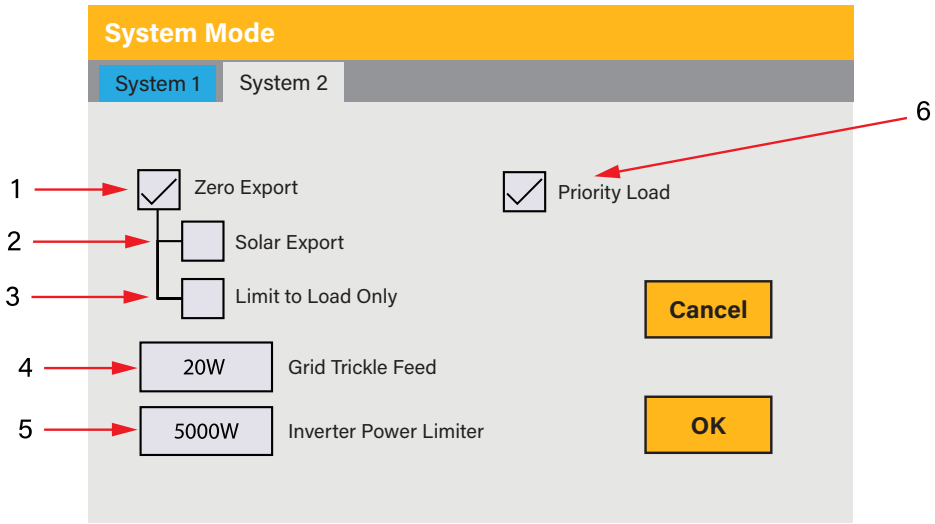

What this page displays:

1. **Zero Export:** Tick this box to not export power back to the grid (the CT coil will detect power flowing back to the grid and will reduce the power of the inverter only to supply the local load).
2. **Solar Export:** Tick this box if you wish to export your solar power back to the grid.
3. **Limit to Load Only:** Tick this box if you only want to supply power to the load side of the inverter.
4. **Grid Trickle Feed:** Is the amount of power flowing from the grid to the inverter. Set this value to '20 - 100W' to instruct the inverter to always take the prescribed amount of power from the grid to minimise the tripping of sensitive pre-paid electricity meters if 'Reverse Power Detection' occurs.
5. **Inverter Power Limiter:** This controls the maximum overall power, both to the 'Load' and 'Grid' ports combined. It is set to Low if an 'over-current' fault occurs.
6. **Priority Load:** Tick this box if you wish to set the solar panels to give power to the 'Load'. If you untick this box, the solar will send power to charge the batteries.

What you can do from this page:

- Set a real time to start and stop charging or discharging the battery.
- Choose to charge the battery from the grid or generator.
- Limit export power to the grid.
- Set the unit to charge the battery from the grid or generator ticking 'Grid' or 'Gen' and set what times this needs to occur.
- Set the time to discharge the unit to the load or export to the grid by unticking 'Grid' and 'Gen'.

If nothing ticked: This Mode allows the hybrid inverter to sell back any excess power produced by the solar panels to the grid. If the use time is active, the battery energy can also be sold into the grid. The PV energy will be used to power the load and charge the battery, and then excess energy will flow to the grid. Power source priority for the load is as follows:

1. Solar Panels.
2. Grid.
3. Batteries (until programable % discharge is reached).

Zero Export + Limit To Load Only: The hybrid inverter will supply power exclusively to the backup load. It will not provide power to the main household load, nor will it send any excess power to the grid. The inverter's built-in CT (Current Transformer) detects any power flowing back to the grid and automatically reduces the inverter's output to match the demand of the local load and the battery charging requirements.

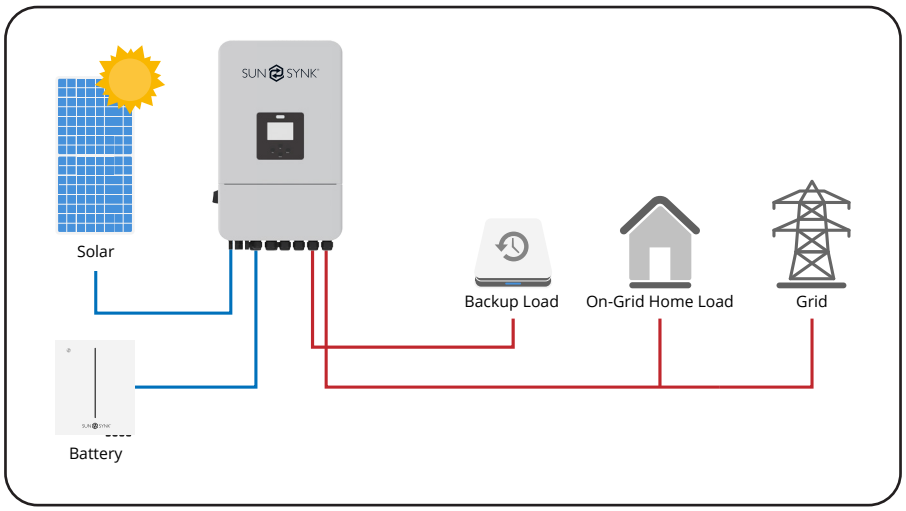

Zero Export to CT: The hybrid inverter supplies power to both the backup load and the main household load. If the available power from the solar panels and the battery is insufficient to meet the demand, the system will pull additional energy from the grid. However, the inverter will not feed power back into the grid. A CT (Current Transformer) is required for this mode, which will detect any excess power and adjust the inverter's output accordingly. For installation instructions regarding the CT, please refer to the "CT Connection" section of this manual. The inverter ensures that power is allocated to the local load, battery, and home load without exporting to the grid.

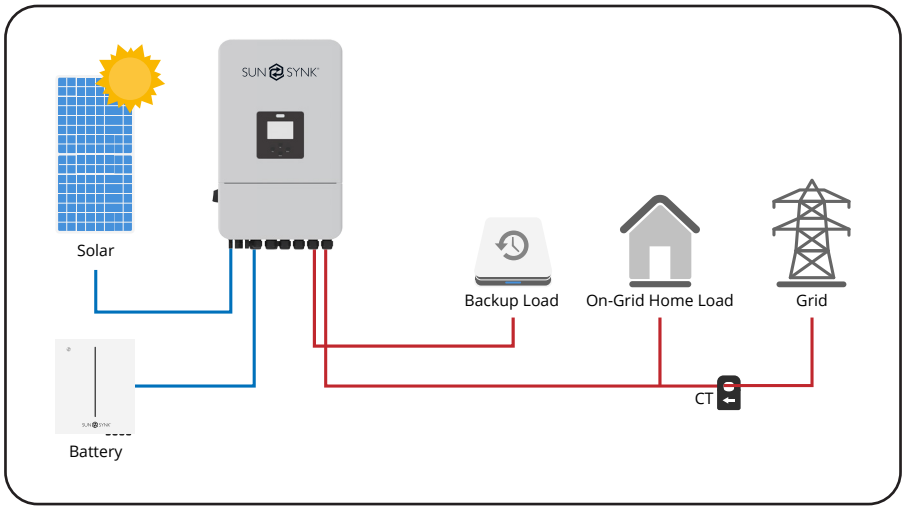

Example:

From 8 a.m. to 11 a.m., the battery is charged to 100% using both solar PV and grid power. After reaching full charge, the system supplies up to 4 kW of power to essential loads via the Load Port until the battery's state of charge (SOC) drops to 50%.

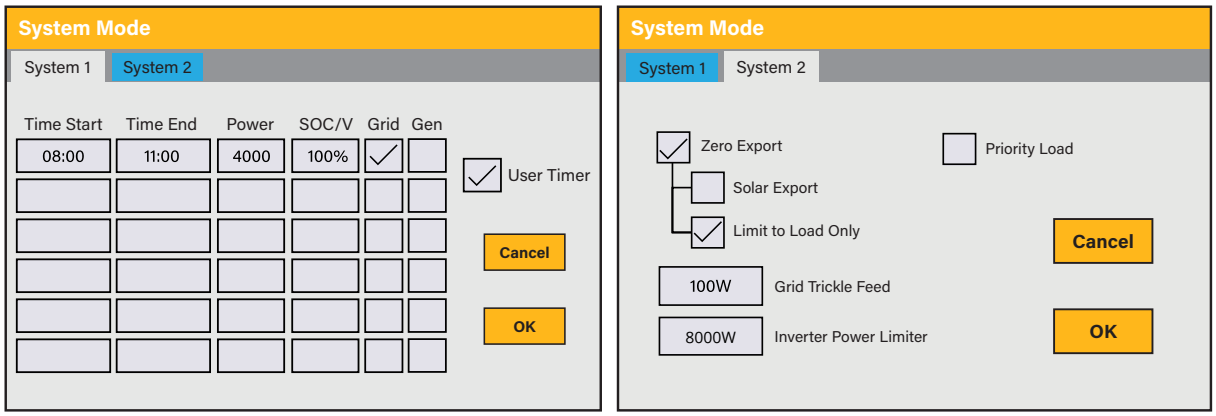

IMPORTANT - When charging the batteries from the grid or generator, ensure the correct battery charge settings are applied, as detailed in the "Battery Setup" section. If the 'Use Timer' function is enabled, the inverter will follow the preset timings for using battery power when grid power is available. Without this setting, batteries will only be used when there is no grid power available.

Example:

In this example, the solar power supplies non-essential loads while the inverter is set to a maximum power of 5 kW (Max Sell Power). Although the system is connected to the grid, no export occurs. To prevent reverse power flow, a small amount of grid power (100W Zero Export Power) is used. Solar PV prioritizes the load, and any excess charges the battery.

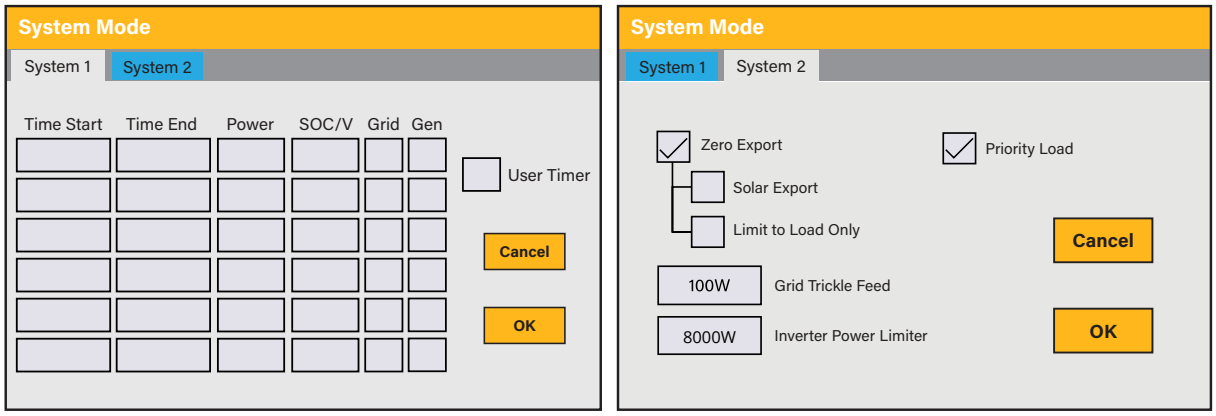

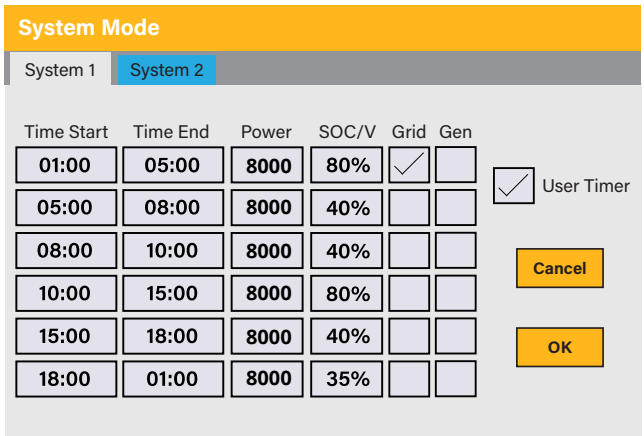

Example:

From 1:00 a.m. to 5:00 a.m., if the battery SOC falls below 80%, the system charges the battery from the grid until SOC reaches 80%.

From 5:00 a.m. to 10:00 a.m., if the battery SOC is above 40%, the system discharges the battery until SOC reaches 40%.

From 10:00 a.m. to 3:00 p.m., when the SOC exceeds 80%, the inverter discharges the battery to bring SOC down to 80%.

From 3:00 p.m. to 6:00 p.m., the system discharges the battery until the SOC drops to 40%.

From 6:00 p.m. to 1:00 a.m., the system discharges the battery until SOC reaches 35%.

Grid Supply Page

In the Settings menu, click on the GRID icon.

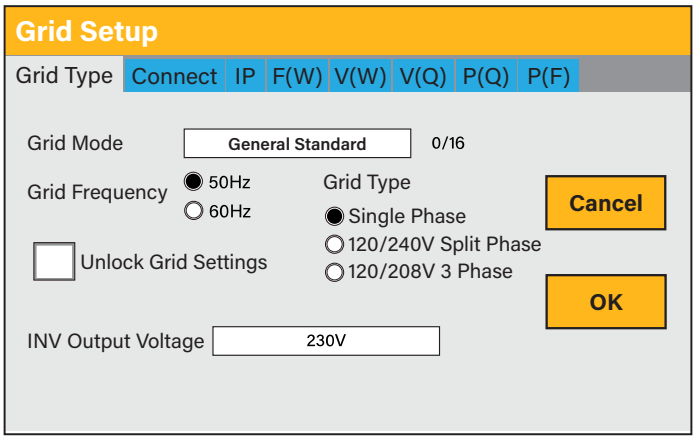

What this page displays:

- **Grid Mode:** General Standard - for example, EN50549_CZ_PPDS_L16A, NRS097, G98/G99. Please follow your local grid code and choose the corresponding grid standard from the drop-down menu. If you cannot find your local grid standard from this menu, please manually input the grid settings as per instructions below.
  - **G100 -** Please ensure the inverter is set to G99/G100 for compliance to G100 regulations.
- Set the Grid frequency.
- Set the Grid type.
- **Unlock Grid Settings:** The inverters grid settings are automatically locked, so if you need to make changes to the grid settings you will need to select this, and it will as for password code.

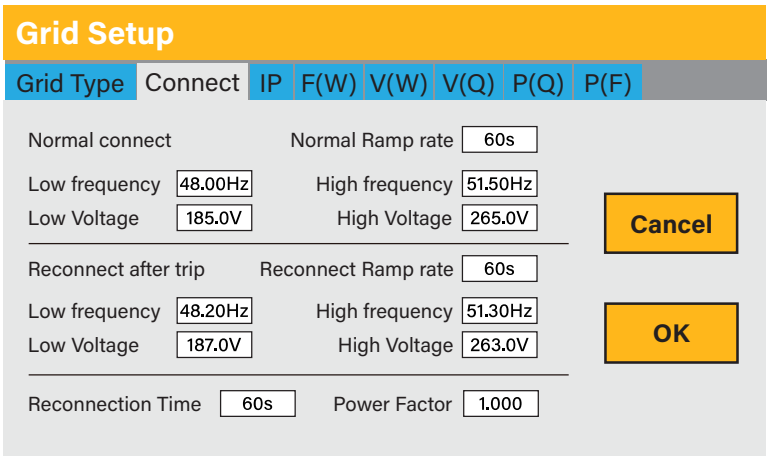

What this page displays:

- **Normal connect:** The allowed grid voltage/frequency range when the inverter first time connects to the grid.
- **Normal Ramp rate:** It is the startup power ramp.
- **Reconnect after trip:** The allowed grid voltage/frequency range for the inverter connects the grid after the inverter trip from the grid.
- **Reconnect Ramp rate:** It is the reconnection power ramp.
- **Reconnection time:** The waiting time period for the inverter to connect the grid again.
- **Power factor:** This is used to adjust the inverter's reactive power.

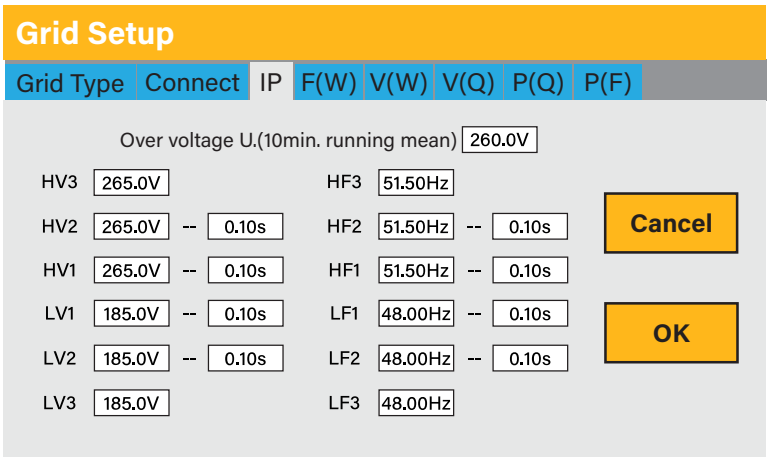

What this page displays:

- **HV1:** Level 1 overvoltage protection point;
- **HV2:** Level 2 overvoltage protection point;
- **HV3:** Level 3 overvoltage protection point.
- **LV1:** Level 1 undervoltage protection point;
- **LV2:** Level 2 undervoltage protection point;
- **LV3:** Level 3 undervoltage protection point.
- **HF1:** Level 1 over frequency protection point;
- **HF2:** Level 2 over frequency protection point;
- **HF3:** Level 3 over frequency protection point.
- **LF1:** Level 1 under frequency protection point;
- **LF2:** Level 2 under frequency protection point;
- **LF3:** Level 3 under frequency protection point;
- **0.10s:** Trip time.

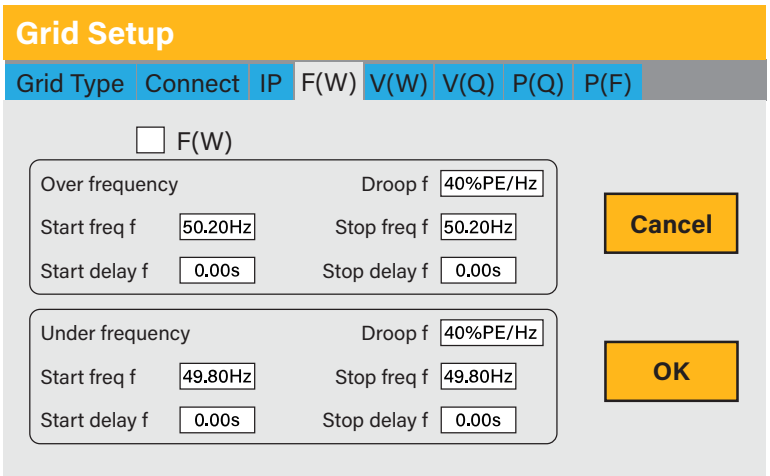

What this page displays:

- **FW:** This series inverter is able to adjust inverter output power according to grid frequency.
- **Droop f:** The percentage of nominal power per Hz.

For example: "Start freq f>50.2Hz, Stop freq f<50.2, Droop f=40%PE/Hz" when the grid frequency reaches 50.2Hz, the inverter will decrease its active power at Droop f of 40%. And then, when the grid system frequency is less than 50.2Hz, the inverter will stop decreasing output power. For the detailed setup values, please follow the local grid code.

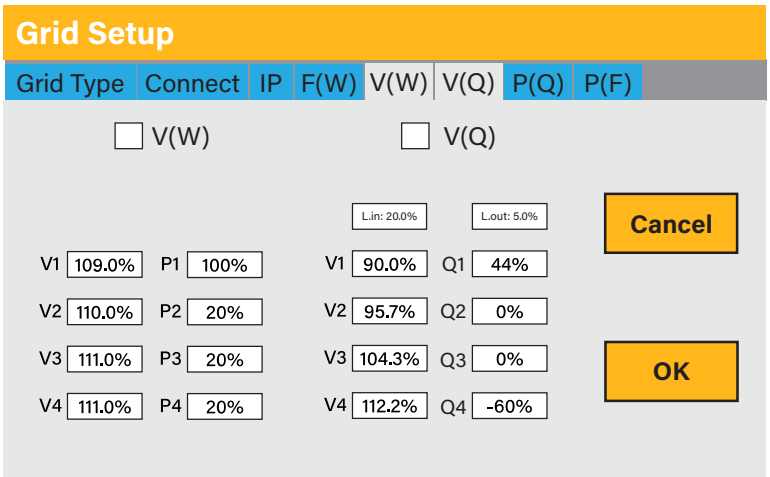

What this page displays:

- **V(W):** It adjusts the inverter active power according to the set grid voltage.
- **V(Q):** It adjusts the inverter reactive power according to the set grid voltage. This function adjusts inverter output (active and reactive) power when grid voltage changes.
- **Lock-in/Pn 5%:** When the inverter active power is less than 5% rated power, the VQ mode will not take effect.
- **Lock-out/Pn 20%:** If the inverter active power increases from 5% to 20% rated power, the VQ mode will take effect again.

For example: V2=110%, P2=20%. When the grid voltage reaches 110% times of rated grid voltage, the inverter output power will reduce its active output power to 20% rated power.

For example: V1=90%, Q1=44%. When the grid voltage reaches 90% times of the rated grid voltage, the inverter output power will output 44% reactive output power.

For the detailed setup values, please follow the local grid code.

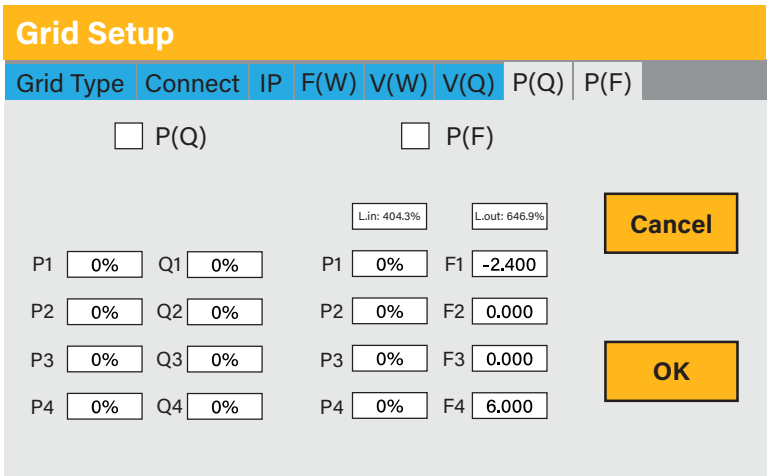

What this page displays:

- **P(Q):** It adjusts the inverter reactive power according to the set active power.
- **P(PF):** It adjusts the inverter PF according to the set active power.
- **Lock-in/Pn 50%:** When the inverter output active power is less than 50% rated power, it won't enter the P(PF) mode.
- **Lock-out/Pn 50%:** When the inverter output active power is higher then 50% rated power, it will enter the P(PF) mode.

For the detailed setup values, please follow the local grid code.

NOTE:

Only when the grid voltage is equal to or higher than 1.05 times the rated grid voltage will the P(PF) mode take effect.

Paralleling Inverters Advanced Settings

To configure multi-inverter settings, click on the ADVANCE icon.

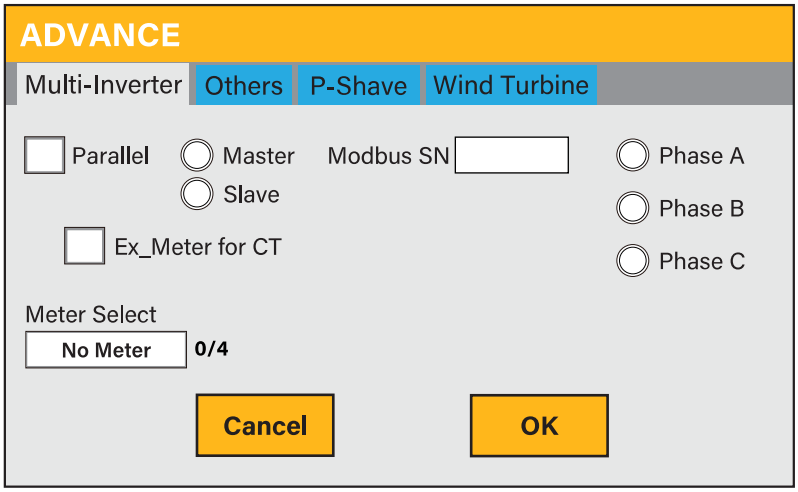

What this page displays:

If the inverter operates as a master or a slave.

- **Modbus Device ID:** 'Modbus SN' that must be unique for each inverter connected to the bus/wire.
- **Ex_Meter For CT:** When in a Three-phase system with a CHiNT Three-phase energy meter (DTSU666), click the corresponding phase where the hybrid inverter is connected. E.g. when the hybrid inverter output connects to A phase, please click A Phase.

What you can do from this page:

- Set the inverter as a master or slave per bus/wire.
- Set the phase in which the inverter will be paralleled.
- Set the Modbus SN for paralleling.
- Select the corresponding meter type according to the meter installed in the system.

The Sunsynk parity inverter can be wired standalone or where more power is required it can be connected in parallel either single or 3 phase configuration. **The maximum number of inverters that can be paralleled in a single phase utility grid is 16 and the maximum number that can be paralleled in a three phase utility grid is 15**.

A master single phase inverter is capable to operate with other 15 slaves inverters. Thus, to parallel 16 inverters in a single phase utility, one will operate as the master, and the other 15 will operate as slaves.

To parallel 15 inverters in a three phase utility grid is necessary to set three inverters as master and the others as slaves:

- Phase A: Master A and 4 Slaves A
- Phase B: Master B and 4 Slaves B
- Phase C: Master C and 4 Slaves C

In a three phase utility grid, the paralleled inverters will operate as a normal three-phase supply with perfect phase rotation, capable of power single phase (220 V_{LN}) and three phase (380 V_{LL}) loads.

For stability, all the batteries need to be connected in parallel. It is recommended a minimum cable size of 50mm2 diameter with fuse isolators to each inverter.

Each inverter will require a fuse isolator with surge protection and each group circuit will require an RCD. If the batteries as supplying power to the main load during the outage, then a change over switch will also be required or a split load can be used.

- The CT coils used to limit export power must only be connected to the master. Therefore, if six inverters are paralleled, three CT coils will be required.
- Connect a RJ45 communication cable between each inverter; the order is not important since both sockets are the same, so there is no IN or OUT.
- Each phase must only have one master and the others set to slave.
- Each inverter must have a unique Modbus number.
- The maximum length of the communication cables is 2 meters (do not exceed this value).
- All batteries must be connected in parallel and the MPPTs must be kept separate.

IMPORTANT**: When configuring inverters in parallel for a single or three-phase, it is important to first check firmware versions to be all the same on all inverters. It is strongly recommended to request firmware update on all inverters to the latest and the exact same firmware version.**

IMPORTANT**: All inverters in a parallel system must have their own isolating load breaker before it goes to the parallel breaker to ensure while programming that the load outputs are isolated from each other.**

Only once confirmed all inverters are programmed correctly in parallel or three-phase then only the isolating breakers can be switched on, which then feeds to the main load output breaker where the actual parallel or three-phase connection is made that feeds the loads. When configuring a three-phase system using three single-phase inverters, one per phase. It is extremely important to check phase rotation to be clockwise feeding the inverters and to confirm the output is also clockwise on phase rotation.

NOTE:

The cables have two ends, one to be specifically connected to the BMS and another one to be connected to the inverter, do not change it. If the communication is not working correctly between inverters, then errors will appear on display. In this case, please check all settings and data cables.

- All inverters in a parallel system must have their own isolating load breaker before it goes to the parallel breaker to ensure while programming that the load outputs are isolated from each other.
- The grid input can also be connected in parallel.

If you need further help please refer to the Sunsynk website where you will find training videos and Frequently Asked Questions www.sunsynk.com. Firmware prior installation is important to be updated and all inverters in parallel or three phase system must be the same.

Common questions that occur when paralleling inverters:

Q1: What is the sequence to install/connect/commission?

First of all, leave the main supplies off. Next, connect all communication cables, set up all LCDs and then, last of all, turn on the main supplies.

Q2: What are the indications that the communication and the system are OK or not?

Parallel errors will be shown as fault F46 on the display.

Q3: What are the consequences of not setting one inverter in a parallel mode?

It can damage the inverter.

Q4: What are the consequences of having more than one Master Inverter or having no inverter set as 'Master'?

It can damage the inverter. There are cases in which it is possible to have more than one master. For example, as aforementioned, six inverters paralleled in a three phase utility grid (three masters).

Q5: What are the consequences for setting A, B, or C phases wrong while in parallel mode?

It can damage the inverter. Recommend checking the phase rotation with a meter before switching on.

Q6: What are the consequences of factory resetting, power cycling, or firmware updating one inverter in a parallel system?

It can damage the inverter. Inverters needs to be isolated from each other before factory reset or firmware update.

Q7: What consequences for changing ALL/ANY settings while operating in parallel mode?

It can damage the inverter and fault F46 will be indicated on the display.

Connecting the DRM's

This can be selected under advance settings.

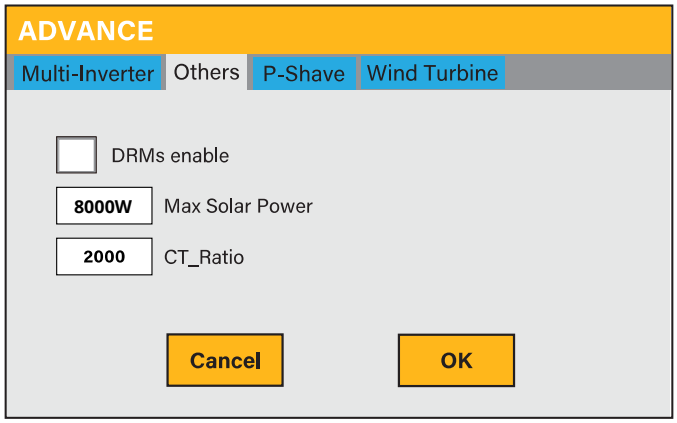

This can be selected under advance settings.

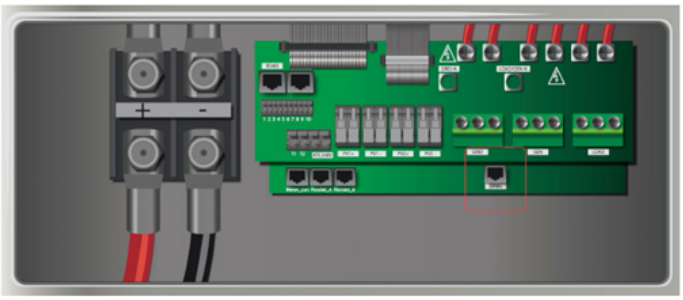

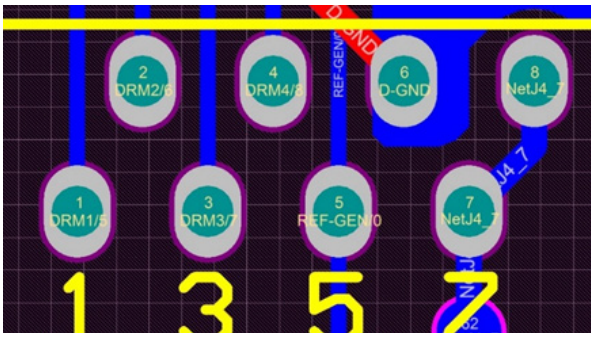

1. DRM 1/5
2. DRM 2/6
3. DRM 3/7
4. DRM 4/8
5. Ref 0
6. D Ground
7. Net J 4-7
8. Net J 4-7

Advanced Function Setup

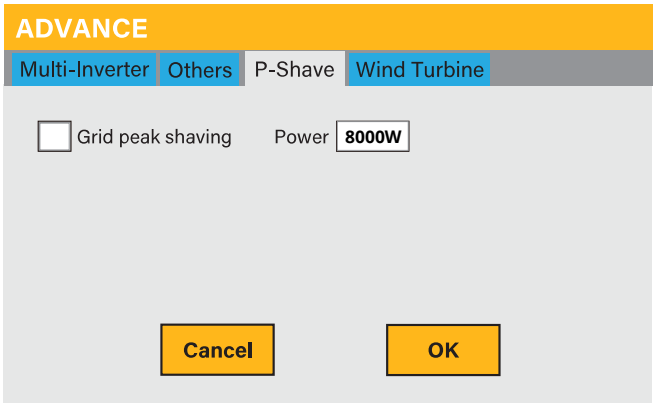

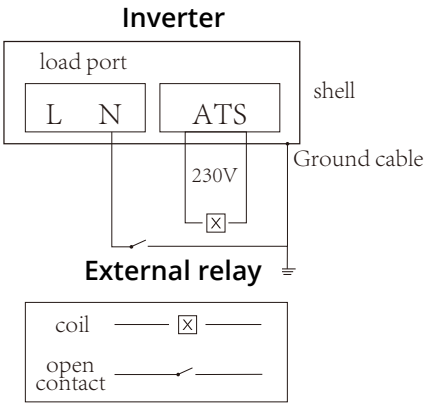

- **Grid peak shaving:** When this is selected, the grid output power will be limited within the set value. If the load power exceeds the allowed value, it will take PV energy and stored battery energy to supplement. If there is not enough PV energy or stored energy to meet the load requirement, grid power will increase to meet the load needs.

Solar Power Generated

This page shows the daily, monthly, yearly, and total solar power produced. Access this page by clicking on the 'Solar/Turbine' icon on the Home Page.

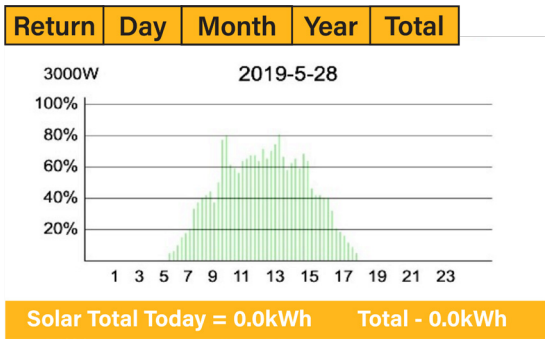

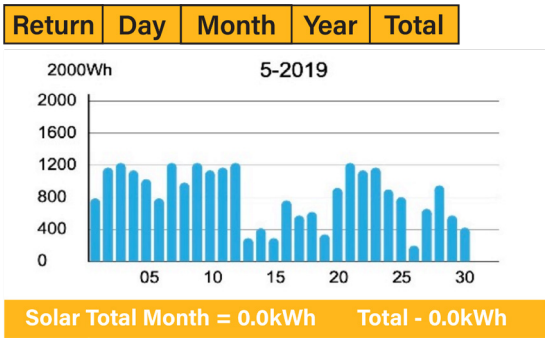

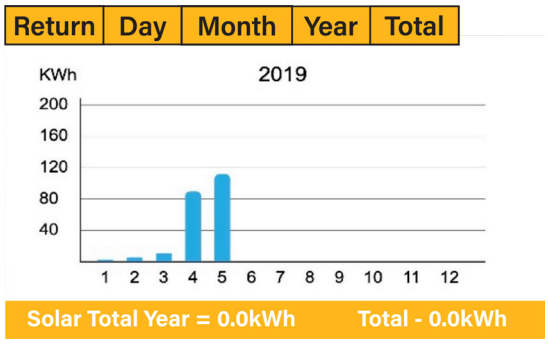

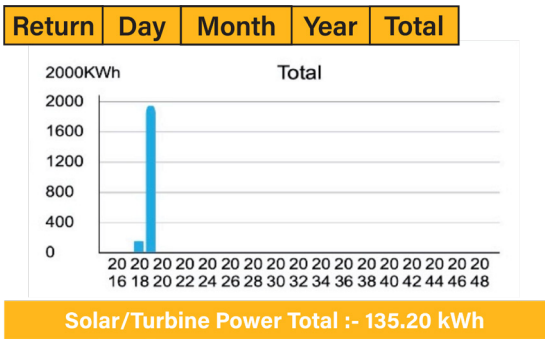

Grid Power

This page shows the Daily / Monthly / Yearly and total grid power export or consumed. Access this page by clicking on the 'Solar/Turbine' icon on the home page.

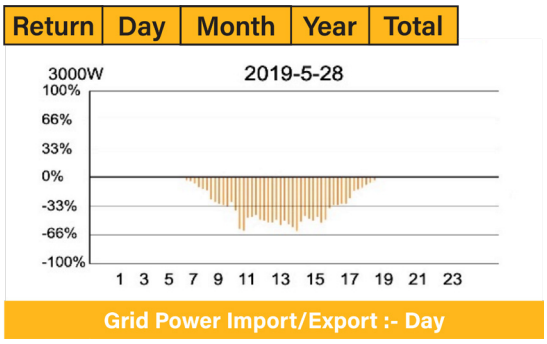

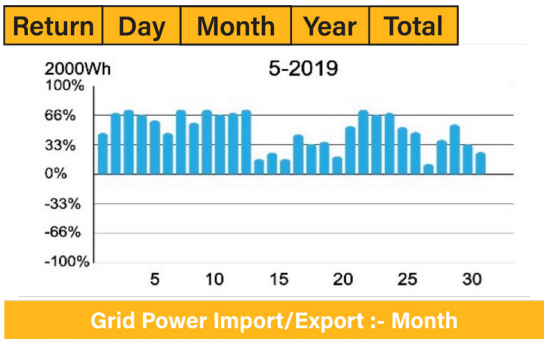

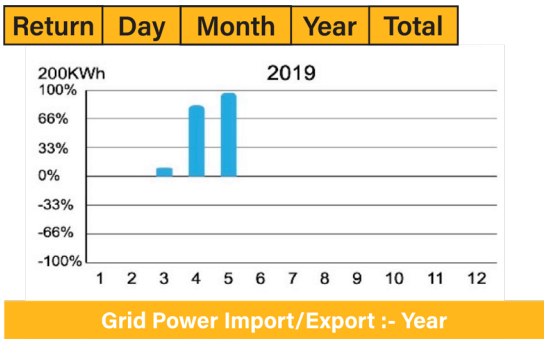

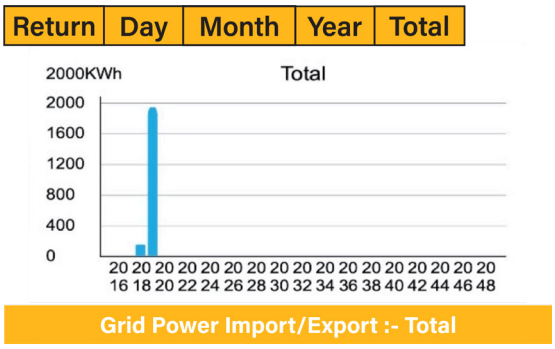

Advanced Settings for Wind Turbines

To configure wind turbine settings, click on the ADVANCE icon.

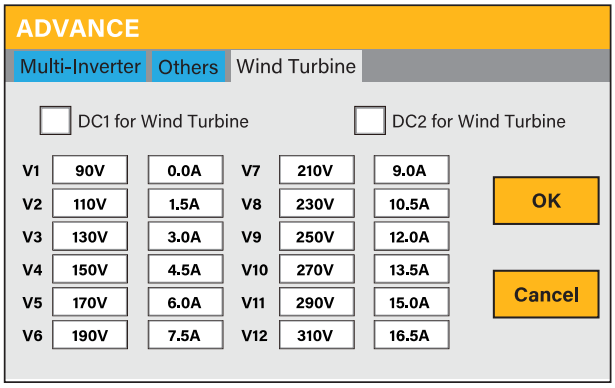

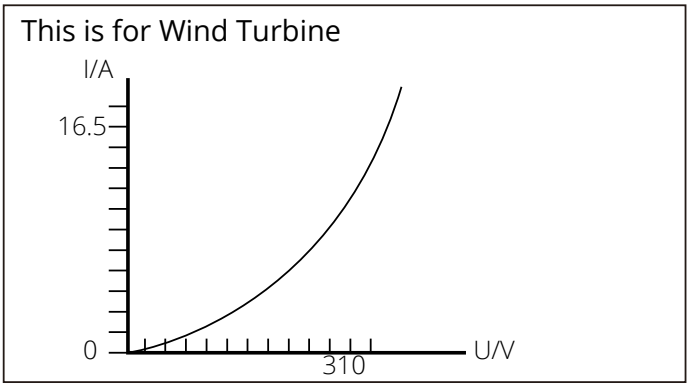

What this page displays:

- If one or both of the MPPTs are connected to a wind turbine.

What you can do from this page:

- Select the MPPT to be used as a turbine input.

Advanced Settings for Auxiliary Load

To configure Auxiliary Load (previously known as "smart load") settings, click on the AUX LOAD icon.

What this page displays:

- Use of the Gen (Aux) input or output.
- Generator peak shaving is ON or OFF.
- Peak Power Shaving value.

What you can do from this page:

- Set up a generator input.
- Set up an auxiliary (smart) load.
- Switch on the generator and/or grid peak power saving and set the power shaving value.
- Use an additional inverter or micro inverter.

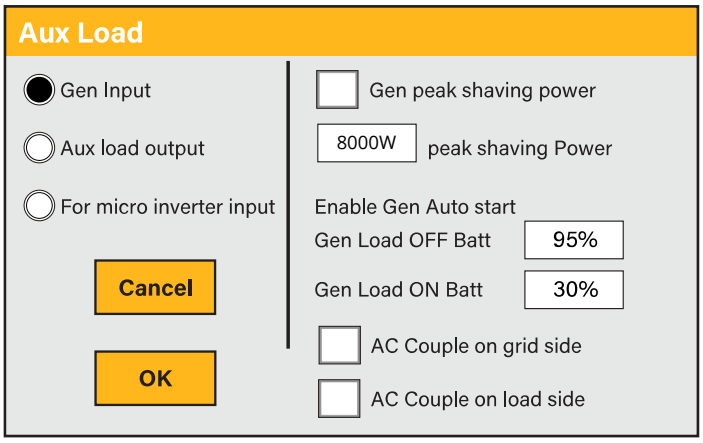

A nice feature of this page is that when the batteries are full and the inverter is still producing power from the solar PV or turbine, it is possible to direct the power generated to another load such as a water heater.

For Gen Input mode:

- **Gen Input:** Tick this box if using a Generator. Allowed Max. power from diesel generator.
- **Peak shaving power:** This is a technique used to reduce electrical power consumption during periods of maximum demand on the utility grid. This enables the user to save substantial amounts of money due to the expensive peak power charges.
- **Gen Load OFF Batt:** Battery level when the Aux load switches off.
- **Gen Load ON Batt:** Battery level when the Aux load switches on.
- **AC couple on load side:** Connecting the output of the on-grid inverter at the load port of the hybrid inverter. In this the situation, the hybrid inverter will not be able to show the load power correctly.
- **AC couple on grid side:** This function is reserved.

For Aux Load Output mode:

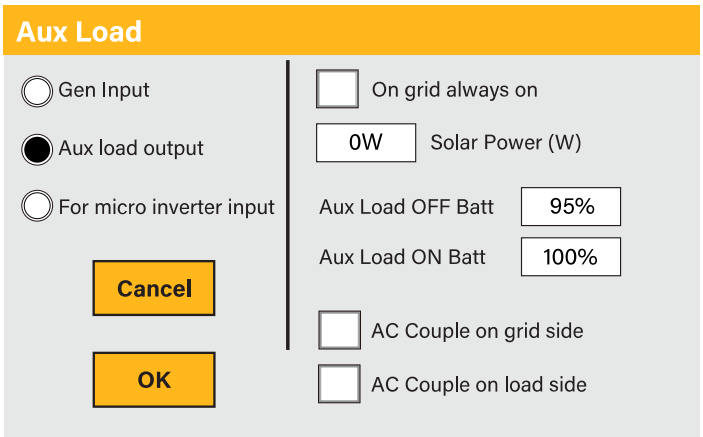

- **Aux Load Output:** This mode utilizes the Gen input connection as an output which only receives power when the battery SOC and PV power is above a user programmable threshold.

For Example: Power=500W, ON: 100%, OFF=95%. When the PV power exceeds 500W, and battery bank SOC reaches 100%, Smart Load Port will switch on automatically and power the load connected. When the battery bank SOC < 95% or PV power < 500w, the Smart Load Port will switch off automatically.

- **On Grid always on:** When click "on Grid always on" the smart load will switch on when the grid is present.
- **Solar Power:** Power limiter to the maximum power allowed to the Aux load.
- **Aux Load OFF Batt:** Battery SOC at which the Smart load will switch off.
- **Aux Load ON Batt:** Battery SOC at which the Smart load will switch on. Also, the PV input power should exceed the setting value (Power) simultaneously and then the Smart load will switch on.

For Micro Inverter Input mode:

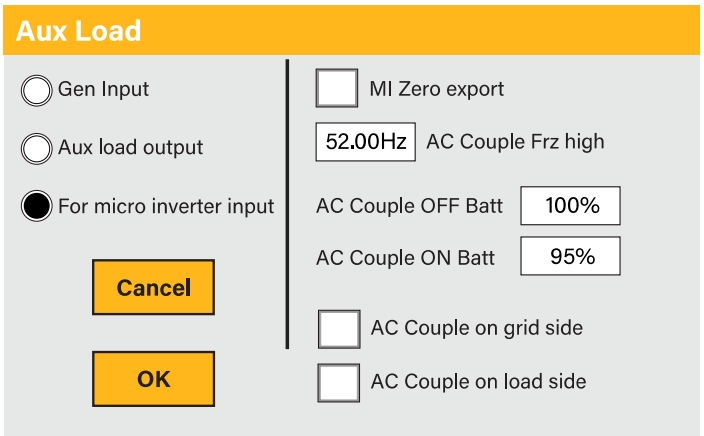

- **Micro Inverter Input:** To use the Generator input port as a micro-inverter on grid inverter input (AC coupled), this feature will also work with "Grid-Tied" inverters. Tick this box if intending to connect a supplementary inverter or micro inverter (Max. 4kW).
- **AC Couple OFF Batt:** When the battery SOC exceeds setting value, Microinverter or the grid-tied inverter will shut down.
- **AC Couple ON Batt:** If choosing “Micro Inv input”, as the battery SOC reaches a gradually setting value (OFF), during the process, the microinverter output power will decrease linearly. When the battery SOC equals to the setting value (OFF), the system frequency will become the setting value (AC couple Frz high), and the Microinverter will stop working and stop exporting power produced by the microinverter to the grid.

NOTE:

Micro Inv Input OFF and On is valid for certain FW versions only.

OPERATION MODES

Mode I: Basic

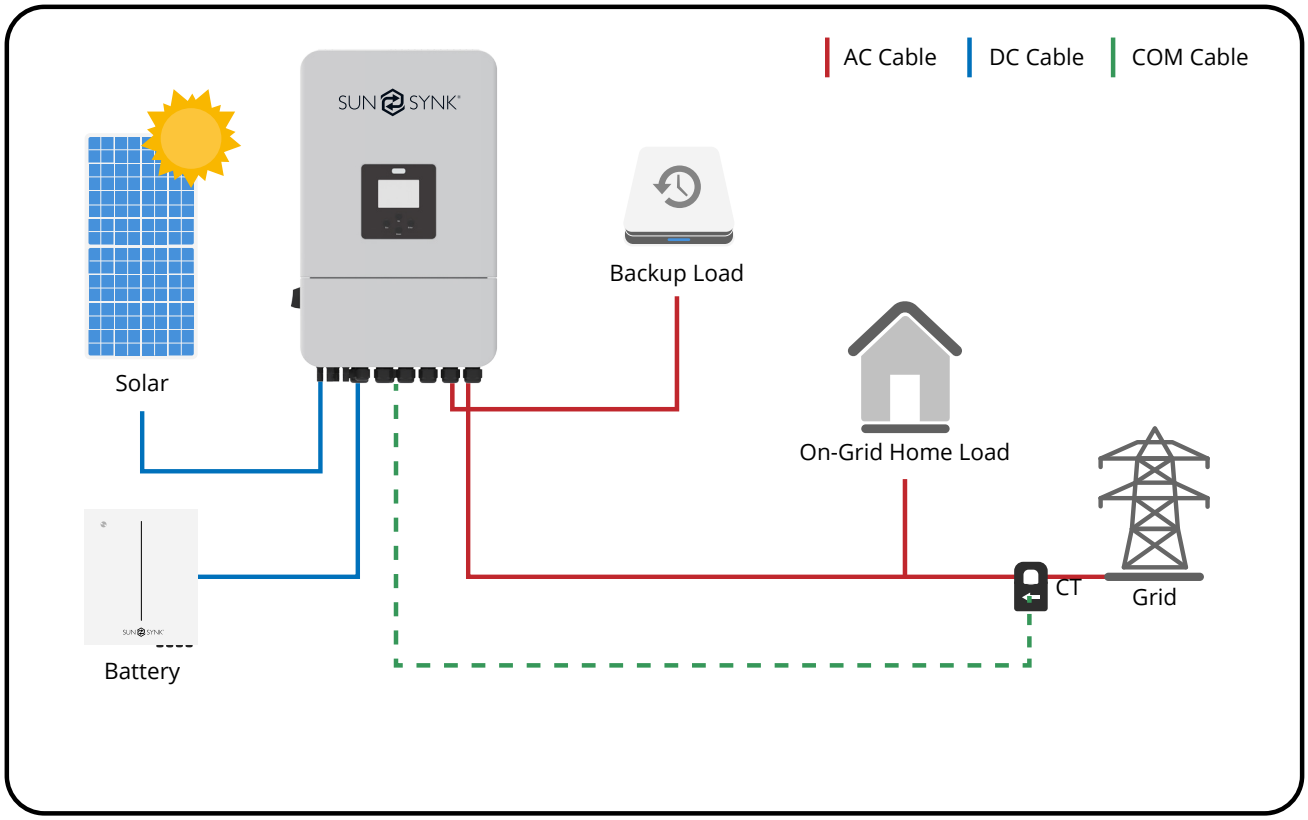

Mode II: Generator

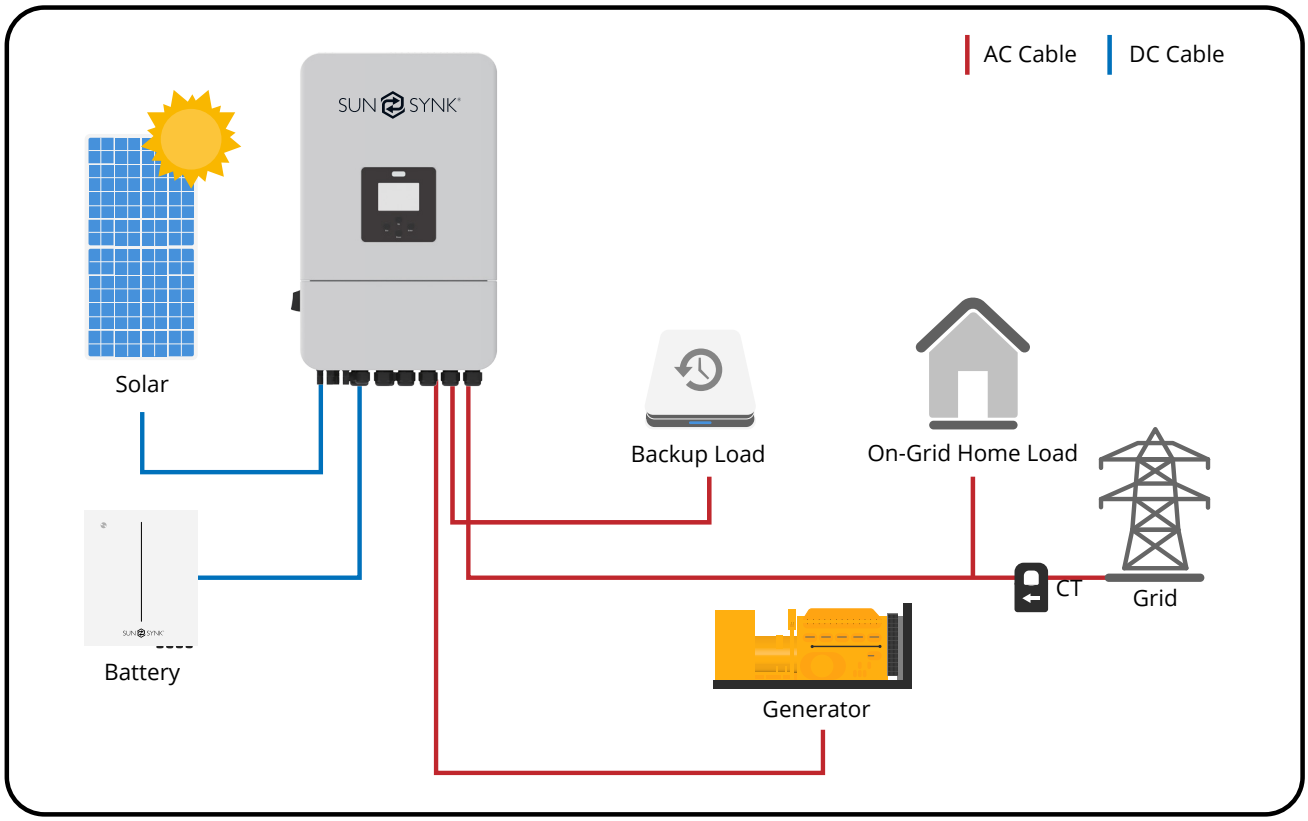

Mode III: With Aux-Load

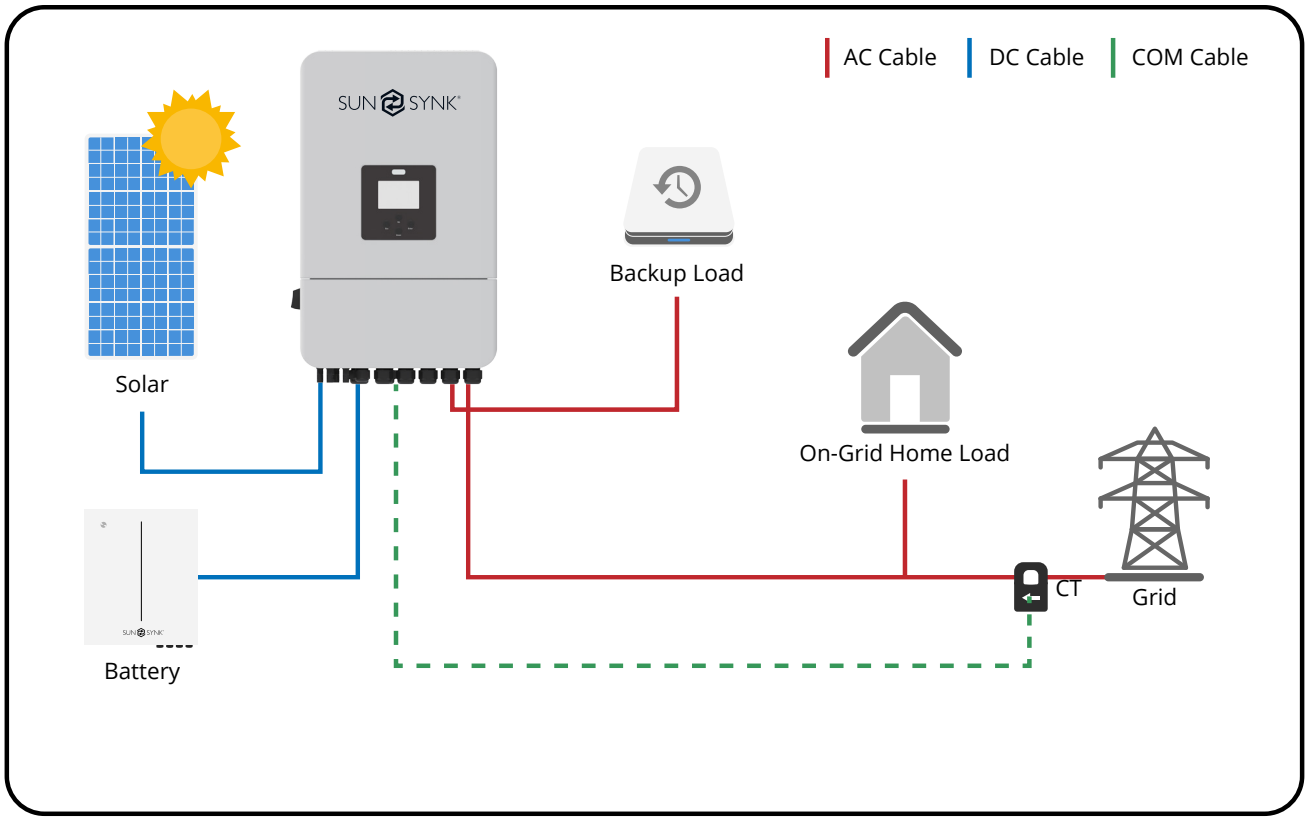

Mode IV: AC Couple

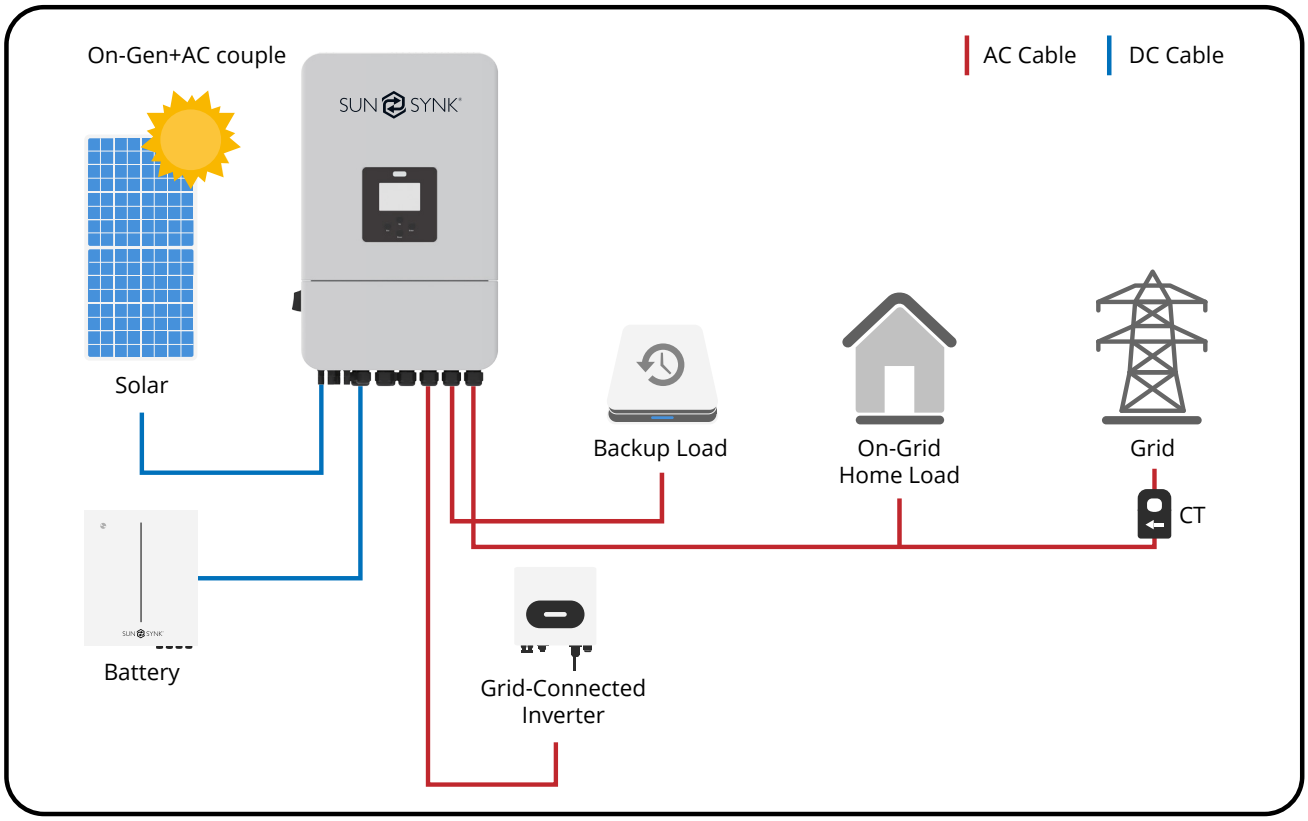

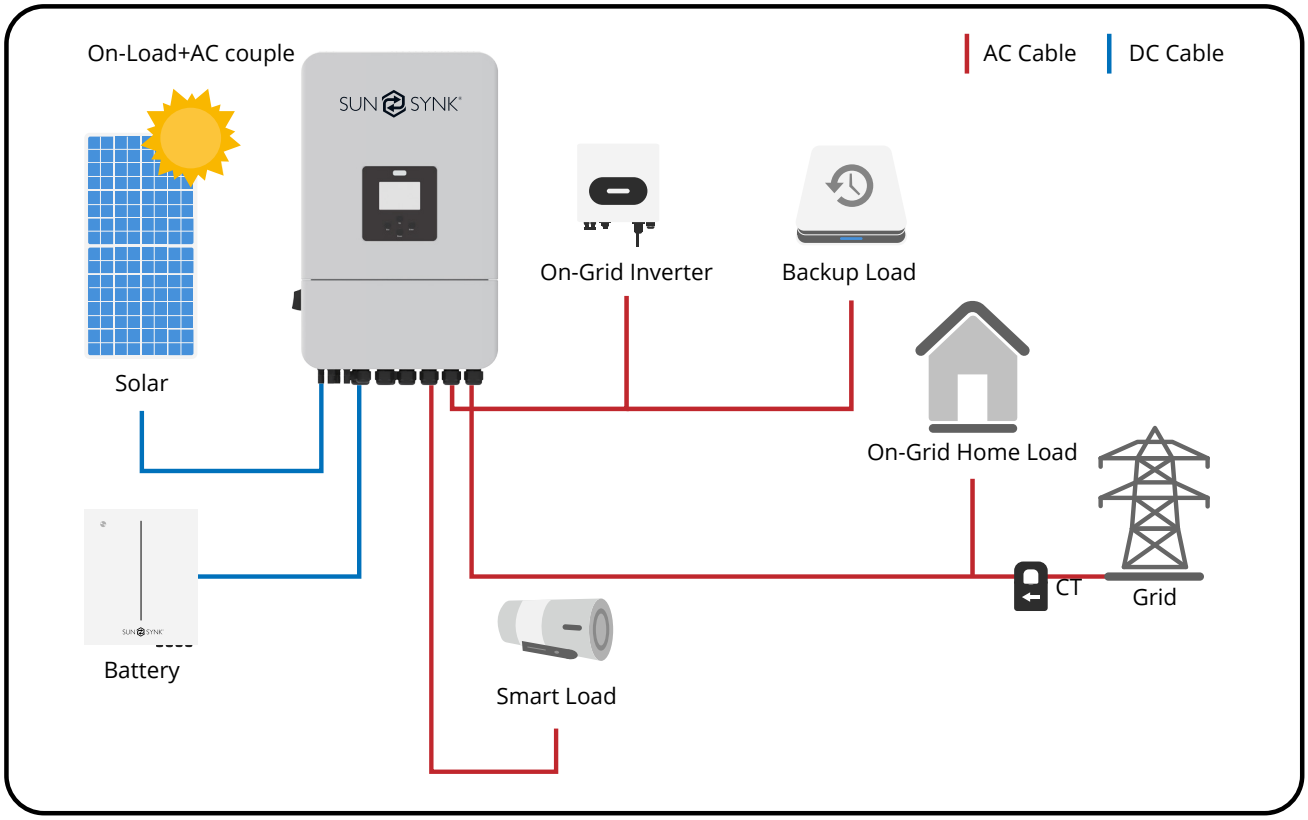

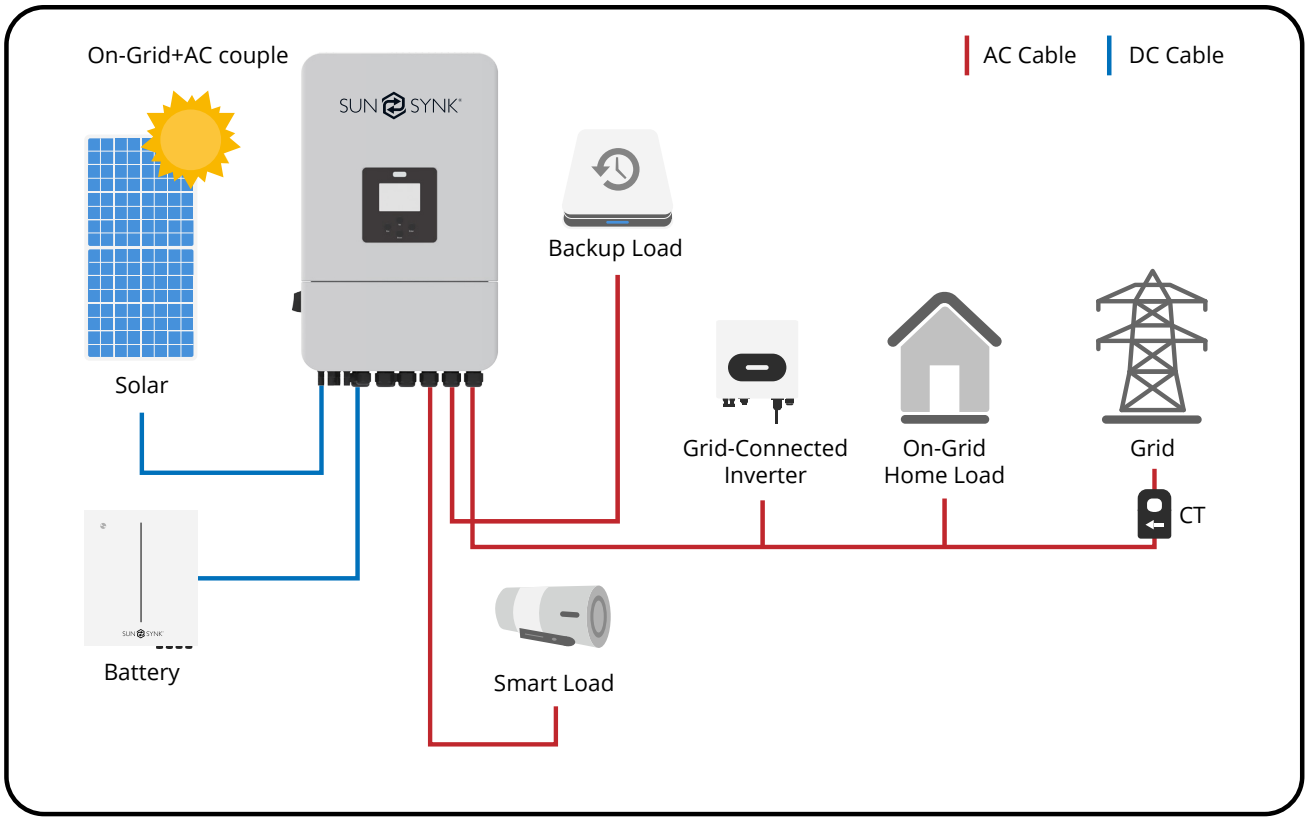

WARNING

The 1st priority power of the system is always the PV power, then 2nd and 3rd priority power will be the battery bank or grid according to the settings. The last power backup will be the Generator if it is available.

Mode V: Grid-Tied

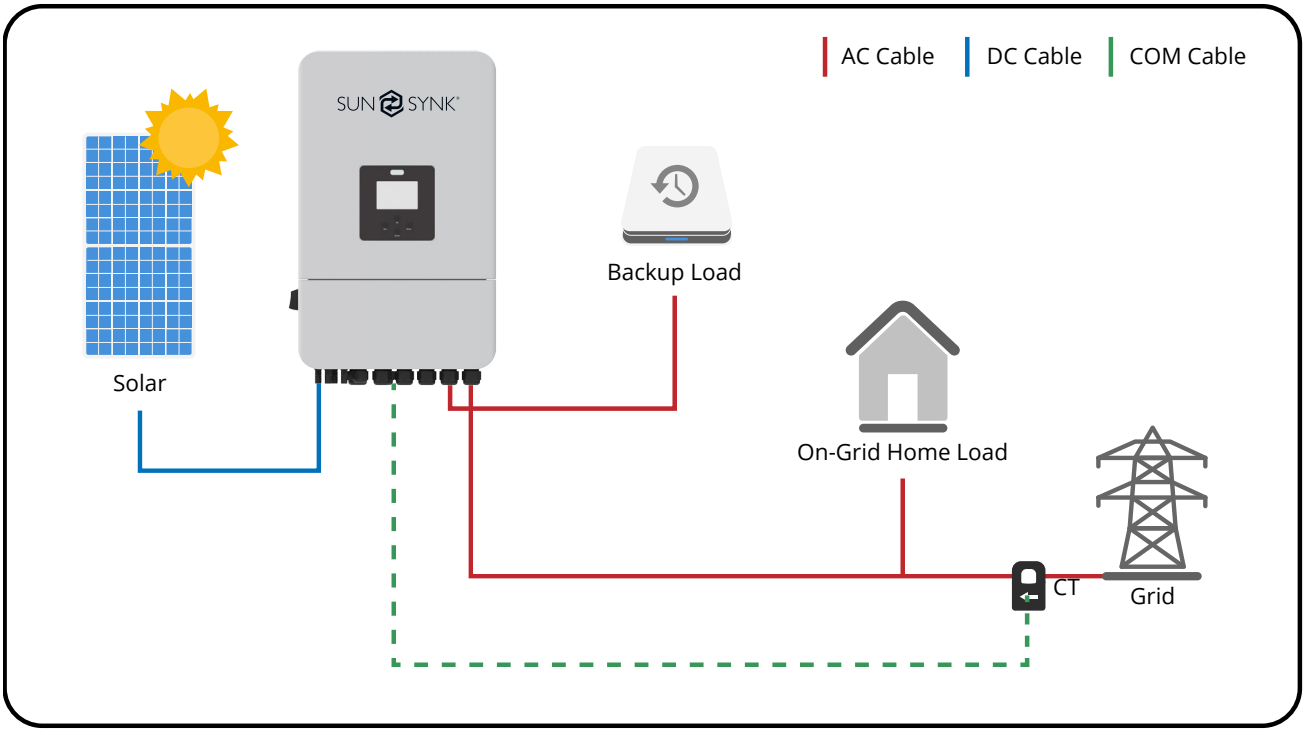

FAULT CODES

To check the fault codes click on the FAULT CODES icon on the settings menu.

FAULT CODES		
Alarms Code	ID:2004244320	Occured
F56	DC_VoltLow_Fault	2022-01-26 12:45
F56	DC_VoltLow_Fault	2022-01-24 11:00
F56	DC_VoltLow_Fault	2022-01-07 18:19
F56	DC_VoltLow_Fault	2022-01-08 01:58
F56	DC_VoltLow_Fault	2021-11-09 13:22
F56	DC_VoltLow_Fault	2021-11-03 17:48
F56	DC_VoltLow_Fault	2021-10-27 16:31
F56	DC_VoltLow_Fault	2021-10-20 19:17

If any of the fault messages listed in the following table appear on your inverter and the fault has not been removed after re-starting, please contact your local vendor or service centre. The following information is required:

1. Inverter serial number.

2. Distributor or service centre of the inverter.

3. On-grid Power Generation Date.

4. The problem description (including the fault code and indicator status displayed on the LCD) with as much detail as possible.

5. Owner's contact information.

In order to give you a clearer understanding of the inverter's fault information, we will list all possible fault codes and their descriptions when the inverter is not working properly.

Error Code	Description	Solutions
F08	GFDI_Relay_Failure	1. When the inverter is in a Split phase (120/240Vac) or three-phase system (120/208Vac), the backup load port N line needs to connect ground; 2. If the fault still exists, please get in touch with us for help.
F13	Working Mode Change	Inverter work mode changed 1. Reset the inverter. 2. Seek help from Sunsynk.
F18	AC over current fault or hardware	AC Slide over current fault. 1. Check if the backup load power is within the range of the inverter. 2. Restart, and check if it is normal.
F20	DC over current fault of the hardware	DC side over current fault 1. Check PV module connect and battery connect; 2. When in the off-grid mode, the inverter startup with a big power load, and it may report F20. Please reduce the load power connected.; 3. Turn off the DC and AC switches, wait one minute, and then turn on the DC/AC switch again. 4. Seek help from us if you can not return to a normal state.
F22	Tz_EmergStop_Fault	Please contact your installer for help.
F23	AC leakage current is trans over current	Leakage current fault 1. Check the PV module and inverter cables. 2. You may have a faulty PV panel (earth short) 3. Restart inverter
F24	DC insulation impedance failure	PV isolation resistance is too low 1. Check if the connection of PV panels and inverter are firmly connected. 2. Check if the earth bond cable on inverters is connected to the ground.
F26	The bus bar is unbalanced	1. Please wait 5 minutes to see if it returns to normal. 2. Fully reset the inverter.
F29	Parallel CANbus fault	1. When in parallel mode, check the parallel communication cable connection and hybrid communication address settings. 2. During the parallel system startup period, inverters will report F29. When all inverters are in ON status, it will disappear automatically; 3. If the fault exists, please contact us for help.
F34	AC Overcurrent fault	1. Check the backup load connected, make sure it is in allowed power range; 2. If the fault still exists, please contact up for help.

Error Code	Description	Solutions
F35	No AC grid	No utility 1. Please confirm grid is lost or not; 2. Check the grid connection; 3. Check the switch between inverter and grid in on or not; 4. If the fault still exists, please contact up for help.
F41	Parallel system stop	1. Check the hybrid inverter working status. If there's 1pcs hybrid inverter is in OFF status, the other hybrid inverters may report F41 fault in parallel system. 2. If the fault exists, please contact us for help.
F42	AC line low voltage	Grid voltage fault 1. Check if the voltage is in the range of standard voltage in specification this can be adjusted via the grid set up page. 2. Check if grid cables are correctly connected.
F47	AC_OverFreq_Fault	Grid frequency out of range 1. Check if the frequency is in the range of specification 2. You may need to adjust the frequency on the grid set up page.
F48	AC_UnderFreq_Fault	Grid frequency out of range 1. Check the frequency is in the range of specification or not. 2. Check whether AC cables are firmly and correctly connected. 3. Seek help from us, if can not go back to normal state.
F56	DC bus bar voltage is too low	Battery low voltage 1. Check if the battery voltage is too low. 2. If the battery voltage is too low use the PV or grid to charge the battery. 3. Check the battery BMS Important: Especially with Lithium batteries, ensure that the batteries Max. discharge current or power specification is the same or higher than the inverter specification.
F58	Battery_comm_Lose	1. It tells the communication between hybrid inverter and battery BMS disconnected when “BMS_Err-Stop” is active. 2. If don’t want to see this happen, you can disable “BMS_Err-Stop” item on the LCD. 3. If the fault still exists, please contact us for help
F63	ARC_Fault	1. ARC fault detection is only for US market. 2. Check PV module cable connection and clear the fault. 3. Seek help from us, if can not go back to normal state.
F64	Heat sink high-temperature failure	Heat Sink temp is too high 1. Check if the working environment temperature is too high. 2. Turn off the inverter for 30 minutes and restart.

Fault Information	Instruction	Fault Information	Instruction
F01	DC_Inversed_Failure	F33	AC_OverCurr_Fault
F02	DC_Insulation_Failure	F34	AC_Overload_Fault
F03	GFDI_Failure	F35	AC_NoUtility_Fault
F04	GFDI_Ground_Failure	F36	AC_GridPhaseSeque_Fault
F05	EEPROM_Read_Failure	F37	AC_Volt_Unbalance_Fault
F06	EEPROM_Write_Failure	F38	AC_Curr_Unbalance_Fault
F07	GFDI_Fuse_Failure	F39	INT_AC_OverCurr_Fault
F08	GFDI_Relay_Failure	F40	INT_DC_OverCurr_Fault
F09	IGBT_Failure	F41	AC_WU_OverVolt_Fault
F10	AuxPowerBoard_Failure	F42	AC_WU_UnderVolt_Fault
F11	AC_MainContactor_Failure	F43	AC_VW_OverVolt_Fault
F12	AC_SlaveContactor_Failure	F44	AC_VW_UnderVolt_Fault
F13	Working_Mode_change	F45	AC_UV_OverVolt_Fault
F14	DC_OverCurr_Failure	F46	AC_UV_UnderVolt_Fault
F15	AC_OverCurr_Failure	F47	AC_OverFreq_Fault
F16	GFCI_Failure	F48	AC_UnderFreq_Fault
F17	Tz_COM_OC_Fault	F49	AC_U_GridCurr_DcHigh_Fault
F18	Tz_Ac_OverCurr_Fault	F50	AC_V_GridCurr_DcHigh_Fault
F19	Tz_Integ_Fault	F51	AC_W_GridCurr_DcHigh_Fault
F20	Tz_Dc_OverCurr_Fault	F52	AC_A_InductCurr_DcHigh_Fault
F21	Tz_GFDI_OC_Fault	F53	AC_B_InductCurr_DcHigh_Fault
F22	Tz_EmergStop_Fault	F54	AC_C_InductCurr_DcHigh_Fault
F23	Tz_GFCI_OC_Fault	F55	DC_VoltHigh_Fault
F24	DC_Insulation_Fault	F56	DC_VoltLow_Fault
F25	DC_Feedback_Fault	F57	AC_BackFeed_Fault
F26	BusUnbalance_Fault	F58	AC_U_GridCurr_High_Fault
F27	DC_Insulation_ISO_Fault	F59	AC_V_GridCurr_High_Fault
F28	DCIOver_M1_Fault	F60	AC_W_GridCurr_High_Fault
F29	AC_AirSwitch_Fault	F61	AC_A_InductCurr_High_Fault
F30	AC_MainContactor_Fault	F62	AC_B_InductCurr_High_Fault
F31	AC_SlaveContactor_Fault	F63	ARC_Fault
F32	DCIOver_M2_FaulT	F64	Heatsink_HighTemp_Fault

NOTE:

- The Single-Phase Hybrid Inverter is designed for grid-connected operation.
- The inverters meet the main standards concerning safety and electromagnetic compatibility. Before leaving the factory, all inverters undergo rigorous testing to ensure the inverter can operate reliably, as presented in Chapter 'Technical Specifications'.

If you need further help please refer to the Sunsynk website where you will find training videos and frequently asked questions www.sunsynk.com.

COMMISSIONING

Start-Up / Shutdown Procedure

The inverter must be installed by a qualified / licensed electrical engineer in accordance with the country's wiring regulations.

Before switching on, the installation engineer must have completed the Earth Bond, RCD and earth leakage tests, checked that the solar panel Voc voltage does not exceed 480V and checked the battery voltage.

Power ON Sequence:

1. Switch on AC
2. Press Start Button
3. Switch on Battery and battery breaker
4. Switch on the DC (PV Isolator)

Shutdown Sequence:

1. Switch off AC
2. Press the start button
3. Switch off the battery and the battery breaker
4. Switch off the DC (PV isolator)

Inverter Commissioning Info

After you have successfully powered up the inverter, it must be programmed and set up as per the programming feature above.

Solar	Check each bond on the solar panels	Check the VOC does not exceed 480V	Ensure both MPPTs are balanced
GRID	Measure the supply voltage check it matches the settings of the inverter	If it falls out of the setting range it will cause the inverse shut down and alarm	See Grid Setup page
BATTERY	Check the battery charge and discharge is within the C rating of the battery. Too high will damage the battery		Check the battery BMS is communicating with the inverter

SYSTEM MODE	This is the heart of the system, this controls everything	Ensure you are familiar with this, if you fully understand the controller you will fully appreciate the capabilities of there inverter	See section 'Program Charge / Discharge Times'
ADVANCE	This is for paralleling systems, and wind turbine	If paralleling inverters in 3 Phase check you phase rotation before switching on the AC Load, in 3 Phase the output voltage will increase across phase to 400V	If using a wind turbine please ensure you have the correct limiting resistor, caps and rectifier
FAULT CODES	Familiarize yourself with common fault codes		

GDFI Fault

Before the inverter connects to the Grid, it will detect the impedance (effective resistance) of the solar PV+ to Ground, and the impedance of the solar PV - to ground. If any of the impedance values are less than 33kΩ, the inverter will not connect to the Grid and will report an error F24 on its LCD.

MAINTENANCE

The inverter is low maintenance. However, it is important that at least twice a year (for dusty environments this may need to be carried out weekly) all the cooling fans, air ducts are cleaned and dust free.

Check if there are no fault codes and Lithium battery communication is correct.

Weekly cleaning statement: Suggest micromesh filters as an available option, micro ants here are a real problem.

APPENDIX A

The following table is the connection on **battery side** of SSLB1:

Protocol	Description
CAN	Pin 1: CAN-H Pin 5: CAN-L Pin 2, 3, 4, 6, 7, 8: NC
RS485	Pin 1: RS485B Pin 2: RS485A Pin 3, 6: GND Pin 7: RS485A Pin 8: RS485B Pin 4, 5: NC
RS232	Pin 3: BMS transmit; Computer receiver Pin 4: BMS receiver; Computer transmit Pin 5: GND Pin 1, 2, 6: NC

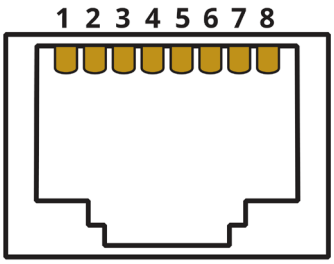

CAN/RS485

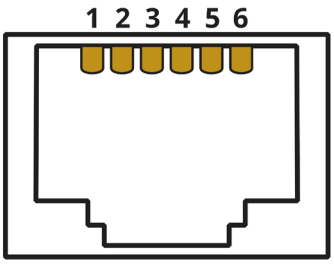

RS232

The following table is the connection on **inverter side**:

Protocol	Description
CAN	Pin 4: CAN-H Pin 5: CAN-L Pin 1, 2, 3, 6, 7, 8: NC
RS485	Pin 1: RS485B Pin 2: RS485A Pin 3, 6: GND Pin 7: RS485A Pin 8: RS485B Pin 4, 5: NC
RS232	Pin 3: BMS transmit; Computer receiver Pin 4: BMS receiver; Computer transmit Pin 5: GND Pin 1, 2, 6: NC

APPENDIX B

Inverters sold in Australia will be set to the Default Australian standards.

APPENDIX C

The Sunsynk Single-Phase Hybrid Inverter inverter is compatible with the Sunsynk Connect app, via a Wifi or GSM data logger (See Sunsynk Connect instruction manual).

APPENDIX D

If an external Residual Current Device (RCD) is used it should be of Type A/AC with a tripping current of 30mA or higher.

Use of RCDs

Residual Current Devices (RCDs): An RCD dedicated for an Inverter Energy System (IES) may be used to meet the mechanical cable protection requirements of AS/NZS3000 for the cable from the switchboard to the IES. If an RCD is installed the engineer must:

1. Disconnect all live conductors (including both active and neutral conductors).
2. Be of the type specified in the inverter manufacturer's instructions or as labelled on the inverter.

We recommend the use of an RCD on all circuits and sub-circuits connected to the Sunsynk Inverter. Below is the specifications for a Residual Current Breaker with Overcurrent Protection (RCBO).

Earth-leakage protection class	Type A
Earth-leakage sensitivity	30mA
Curve code	C
Grid type	AC
Poles description	2P
Earth-leakage protection time delay	Instantaneous

APPENDIX E

The Sunsynk inverter can be connected to the internet, but you need to add a data logger to do this.

The inverter is compatible with Sunsynk Connect data-logger, which you can obtain from us with your distributor.

1. LAN-Type Data Logger
2. Wi-Fi-Type Data Logger
3. GSM-Type Data Logger

To setup the Internet connection for the Sunsynk Connect, please refer to the App User instructions. The Data Logger should be connected to the bottom of the inverter via the connection socket marked WIFI.

For more information, training videos, software upgrades, help line, forum please refer to http://www.sunsynk.com - Tech Support (Do not forget to register first on the website).

Sunsynk @energysolutions sunsynkofficial

Contact Us

Call +44 151 832 4300 **Email** sales@sunsynk.com **Website** www.sunsynk.com

Address

HK Room 702-704, 7/F Texwood Plaza, 6 How Ming Street, Kwun Tong, Kowloon, Hong Kong

UK Sunsynk UK Ltd, 17 Turnstone Business Park, Mulberry Avenue, Widnes, Cheshire, WA8 0WN

SA Unit 2, 3 & 4, 80 Highview Blvd, Ferndale, Randburg, 2160, South Africa

NL Sunsynk NL BV, Henri Wijnmalenweg 8, 5657 EP Eindhoven, Netherlands

AU Level 1, 982-988 Wellington Street, West Perth WA 6005, Australia

ES Tafetana, 32 P.I. Las Andoriñas 38639 Las Chafiras Santa Cruz de Tenerife

US 100 S. Ashley Drive, Suite 600, Tampa, Florida, 33602, United States of America